Installation, Use and Maintenance Manual for model

R1K 34

Premix condensing system boiler

only heating

CE 0476

R1K 34 - RAD - ING - Manuale - 1706.1_V3

SUMMARY

INTRODUCTION 4

1. INSTALLER SECTION 7

1.1. INSTALLATION 8
1.1.1. GENERAL INSTALLATION WARNINGS 8
1.1.2. BOILER LOCATION ENVIRONMENTAL REQUIREMENTS 8
1.1.3. REFERENCE LEGISLATION 9
1.1.4. UNPACKING 10
1.1.5. POSITIONING AND MINIMAL TECHNICAL SPACES 11
1.1.6. OVERALL DIMENSIONS 13
1.1.7. JIG 13
1.1.8. CIRCULATOR PREVALENCE/FLOW DIAGRAM 14
1.1.9. HYDRAULIC CONNECTION 15
1.1.10. SYSTEM FILLING 16
1.1.11. FILLING THE CONDENSATE COLLECTION SIPHON 17
1.1.12. ANTI-FREEZE PROTECTION 18
1.1.13. GAS CONNECTION 19
1.1.14. ELECTRICAL CONNECTION 19
1.1.15. POWER SUPPLY 20
1.1.16. OPTIONAL ELECTRICAL CONNECTIONS 21
1.1.17. FUME EXHAUST FITTINGS 23
1.1.18. INSTALLATION MODES 24
1.1.19. TYPES OF FUME EXHAUST SYSTEMS 26

2. SUPPORT CENTRE SECTION 29

2.1. FIRST START-UP 30
2.1.1. PRELIMINARY OPERATIONS FOR FIRST START-UP 30
2.1.2. BOILER COMMISSIONING 31
2.1.3. CO2 VALUE CHECK AND CALIBRATION 32
2.1.4. ACCESSING AND PROGRAMMING THE PARAMETERS 33
2.1.5. DIGITECH CS PARAMETERS TABLE 35
2.1.6. ELECTRIC FAN FREQUENCY/HEAT CAPACITY DIAGRAM 42

2.2. MAINTENANCE 43
2.2.7. GENERAL MAINTENANCE WARNINGS 43
2.2.8. TECHNICAL DATA 44
2.2.9. TECHNICAL ASSEMBLY 48
2.2.10. HYDRAULIC BOARD 49
2.2.11. WIRING DIAGRAM 50
2.2.12. ACCESSING THE BOILER 51

2.2.13. ACCESSING THE ELECTRONIC BOARD 52
2.2.14. SYSTEM EMPTYING 53
2.2.15. FAULT SIGNALLING CODES 54
2.2.16. ACTIVE FUNCTIONS SIGNALLING CODES 57
2.2.17. GAS TYPE TRANSFORMATION 58

3. USER SECTION 59

3.1. USE 60
3.1.1. GENERAL USE WARNINGS 60
3.1.2. CONTROL PANEL 61
3.1.3. DISPLAY ICONS 62
3.1.4. INFO MENU DISPLAY DATA 63
3.1.5. START-UP 64
3.1.6. OPERATING MODE 64
3.1.7. INFORMATIONAL NOTE ON ANTI-FREEZE FUNCTION 65
3.1.8. SYSTEM FILLING 66
3.1.9. FAULT SIGNALLING CODES 67
3.1.10. ACTIVE FUNCTIONS SIGNALLING CODES 69
3.1.11. MAINTENANCE 70
3.1.12. COVER CLEANING 70
3.1.13. DISPOSAL 70

INTRODUCTION

WARNING

Before starting any operation it is mandatory to read this instruction manual, in relation to the activities to be carried out as described in each relevant section. Proper operation and optimal performance of the boiler are ensured by strict compliance with all the instructions given in this manual.

The installation, use and maintenance manual is an integral and essential part of the product and must be delivered to the user.

MANUAL USERS

The manual users are all those who install, use and maintain the boiler.

The boiler must be used and accessed only by qualified operators that fully read and understood the use and maintenance manual, paying particular attention to the warnings.

READING AND SYMBOLS OF THE MANUAL

To ease the understanding of this manual, recurrent symbols where used, in particular:

- On the outer margin of the page is placed a thumb index indicating the type of user to which the instructions in that section address.
- The titles are differentiated by thickness and size in accordance with their hierarchy.
- The images contain important parts described in the text, marked with numbers or letters.
- (See chap "chapter name"): this entry indicates another section in the Manual that you should refer to.
- Device: this term is used referring to the boiler.

DANGER

It identifies an information related to a general danger that if not complied with, may cause serious personal damage or even death.

ATTENTION

It identifies an information that if not complied with may cause small or medium level lesions to the person or serious deterioration to the boiler.

WARNING

It identifies a precaution information that must be observed in order to avoid damaging the machine or parts of it.

MANUAL STORAGE

The manual must be carefully stored and replaced in case of deterioration and/or low legibility.

If you misplace the use and maintenance manual, you can request it from the Technical Support Centre giving the serial number and model of the boiler indicated on the plate placed on the right side of its casing.

As an alternative, the use and maintenance manual can be downloaded free from the on-line site www.radiant.it, accessing the "download" section and entering the boiler model.

MANUFACTURER WARRANTY AND RESPONSIBILITY

The warranty of the Manufacturer is provided only through its own authorized Technical Support Centres, listed for each Region and Provence on the site www.radiant.it, and covers all conformity defects at the moment of sale.

The technical and functional features of the device are ensured by its use in compliance:

1. with the use and maintenance instructions contained in the manuals accompanying the product, the content of which the customer certifies that he is aware;

2. with the conditions and purposes to which assets of the same type are intended.

For more information on the warranty validity, its duration, the obligations and the exemptions, please consult the First start-up certificate attached to this manual.

The manufacturer reserves:

- the right to modify the tools and relative technical documentation without any obligation to third parties; neither will the company be held responsible for any inaccuracies in this handbook deriving from printing or translation errors;

- the material and intellectual ownership of this manual and forbids its distribution and duplication, even partial, without prior written authorization.

PRODUCT CONFORMITY

RADIANT BRUCIATORI spa declares that its gas boilers comply with the European Directives and with the requirements provided in the European standards below:

- Eco-design Directive 2009/125 CE,

- Energy labeling Directive 2010/30/CE,

- EU regulation 811/2013,

- EU regulation 813/2013,

- Gas Directive 2009/142/CE,

- Electromagnetic compatibility Directive 2014/30/CE,

- Performance Directive 92/42/CE,

- Low voltage Directive 2014/35/CE.

The materials used such as copper, brass, stainless steel create a homogeneous, compact and functional assembly, easy to install and manage. In its simplicity, the boiler is equipped with all accessories necessary to render it a veritable independent heating unit. All boilers are tested and delivered with a quality certificate signed by the tester.

1. INSTALLER SECTION

The installation operations described in this section should be performed only by qualified personnel, having the appropriate technical training in the field for the installation and maintenance of components of civil and industrial domestic hot water production and heating plants.

1.1. INSTALLATION

1.1.1. GENERAL INSTALLATION WARNINGS

ATTENTION

This machine may be used only for the purpose for which it has been designed: heat water to a temperature below boiling point at atmospheric pressure. Any other use is considered wrong and dangerous. The manufacturer is excluded from any contractual or out of contract responsibility for damage caused to people, animals or property due to errors during installation.

ATTENTION

This boiler should be installed only by qualified personnel, having the appropriate technical training in the field for the installation and maintenance of components of civil and industrial domestic hot water production and heating plants.

ATTENTION

After having removed the packing, make sure the equipment is intact. In case of doubt, do not use the equipment and contact the supplier.

BEFORE INSTALLING THE BOILER, THE INSTALLER MUST MAKE SURE THAT THE FOLLOWING CONDITIONS ARE MET:

- The device is connected to a heating plant and a water supply network appropriate for its power and performance.
- The location must be properly vented through an air vent.

The air vent must be placed at floor level to prevent it from being obstructed, protected by a grid that does not hamper the useful section of passage.

- The device is suitable for use with the type of gas available by checking the boiler data plate (placed on the inner side of the front casing.
- Make sure that the tubes and couplings are perfectly sealed, without any gas leaks.
- Make sure that the grounding system works properly.
- Make sure that the electrical systems is suitable for the maximum power absorbed by the equipment, value indicated on the data plate.

WARNING

Use only original RADIANT optional or kit accessories (including electrical).

1.1.2. BOILER LOCATION ENVIRONMENTAL REQUIREMENTS

The device's installation location should be vented due to the presence of threaded joints on the gas adduction line. The location should be therefore provided with vents as to ensure air exchange, with output grid in the natural accumulation area of eventual gas losses.

WARNING

DO NOT install the boiler in a technical compartment near a swimming pool or a laundry, to avoid that the combustion air is exposed to chlorine, ammonia or alkaline agents that may worsen the corrosion phenomenon of the heat exchanger. Failure to observe this caution will void the warranty of the heat exchanger.

THIS BOILER HAS BEEN DESIGNED FOR OUTDOOR INSTALLATION IN A PARTIALLY PROTECTED

LOCATION (SEE FIG.2 AT CHAPTER 'POSITIONING AND MINIMAL TECHNICAL SPACES').

THIS BOILER IS ABLE TO OPERATE IN A PARTIALLY PROTECTED PLACE, WITH SURROUNDING TEMPERATURES WITHIN A MIN. OF -10 °C AND A MAX. OF 60 °C.

WARNING

If the temperature in the boiler installation location goes below -10° centigrades, please fill the plant with anti-freeze liquid and insert and electrical resistances kit (see chapter 'ANTI-FREEZE PROTECTION').

WARNING

The manufacturer will not be held responsible for damages caused by incorrect installation not in conformity with the over mentioned instructions and not protected adequately from the freeze.

1.1.3. REFERENCE LEGISLATION

The installation must be realized according to the requirements of current legislation and in compliance with local technical regulations, according to the indications of the good technique.

1.1.4. UNPACKING

WARNING

Please unpack the boiler just before installing it. The Company is not responsible for the damages caused to the device due to incorrect storage.

WARNING

The packing elements (cardboard box, wooden crate, nails, fasteners, plastic bags, expanded polystyrene, etc.) must be kept out of the reach of children as they may be dangerous. Therefore they should be dismantled suitably differentiating them in accordance with the standards in force.

To unpack the boiler, proceed as follows:

- Place the packed boiler on the floor (fig. 1-A) and remove the fasteners opening the four flaps of the box outwards.
- Turn the boiler at 90° holding it with your hand (fig. 1-B).
- Lift the box (fig. 1-C) and remove the guards (fig. 1-D).

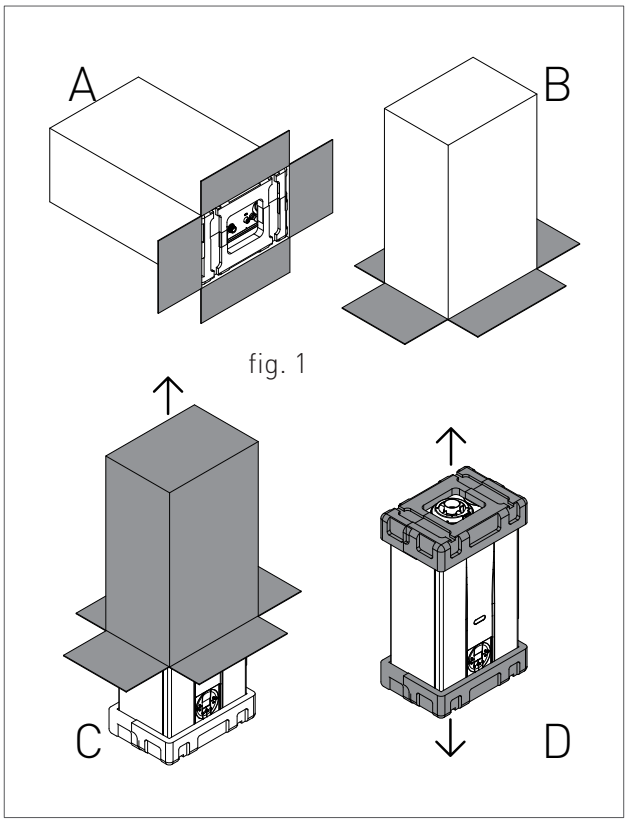

fig. 1

1.1.5. POSITIONING AND MINIMAL TECHNICAL SPACES

The boiler must be installed only on a vertical solid wall, able to sustain its weight.

In order to allow the access inside the boiler for maintenance operations, you have to respect the minimum technical spaces indicated in figure 1.

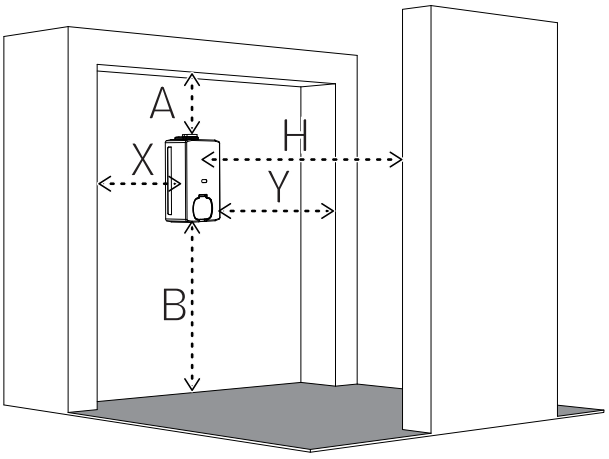

A - 200 mm
B - 300 mm
X - 60 mm
Y - 60 mm
H - 1000 mm

fig.1

It is allowed an outdoor installation in a partially protected location (i.e. shelter, balcony) that respect the minimum measure indicated in figure 2.

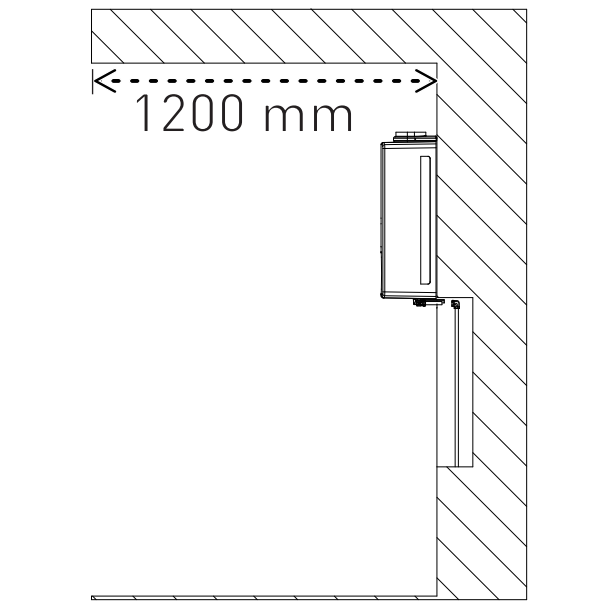

1. INSTALLATION

To facilitate the installation, the boiler is provided with a jig that allows setting in advance the connections to the tubes offering you the possibility of connecting the boiler to completed masonry works.

For machine positioning, proceed as follows (see fig. 3):

1. Trace a line using a spirit level (min. length 25 cm) on the installation wall.

2. place the top of the jig along the traced line respecting the distances of the water connections; then mark the two points to insert the two knobs or the fasteners, then trace the points for the fume exhaust fittings;

3. remove the jig and drill the wall;

4. hang the device using the knobs or the bracket and perform the connections.

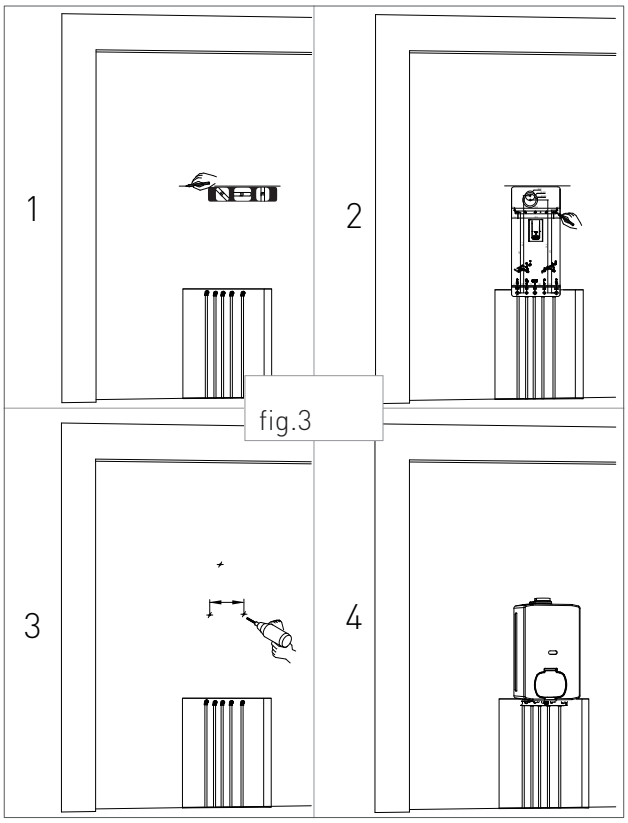

fig.3

1.1.6. OVERALL DIMENSIONS

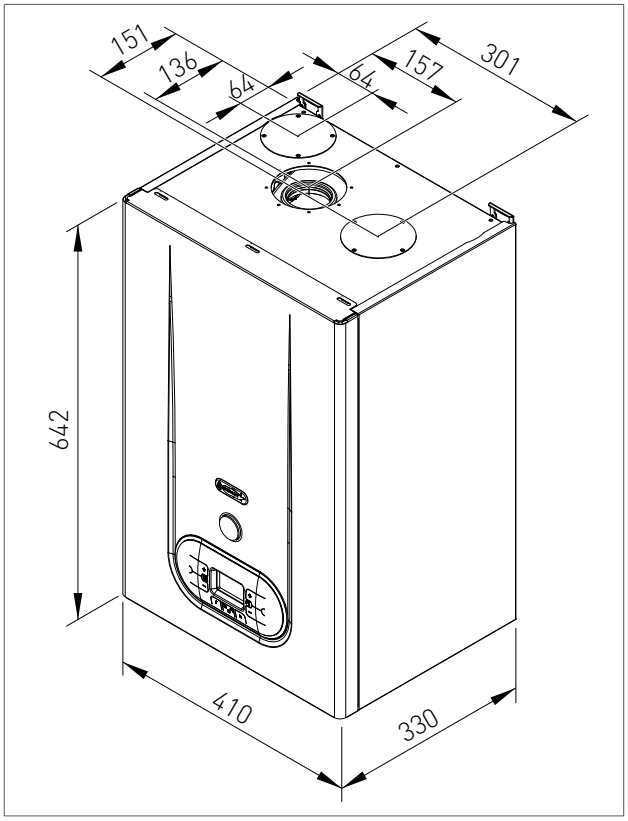

1.1.7. JIG

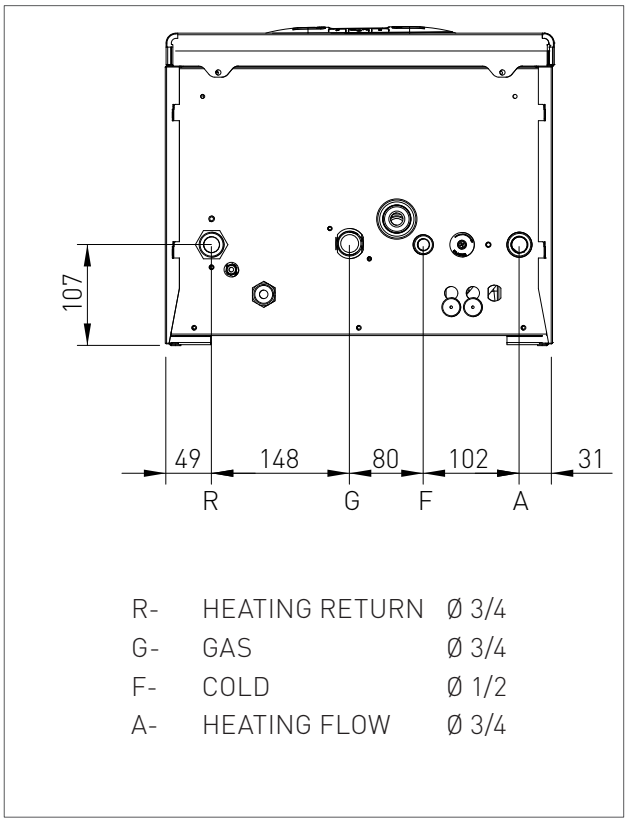

R-	HEATING RETURN	Ø 3/4
G-	GAS	Ø 3/4
F-	COLD	Ø 1/2
A-	HEATING FLOW	Ø 3/4

WARNING

Make sure, using a level, that the boiler is properly inclined being levelled (see fig.1) so as to allow the condense to drain.

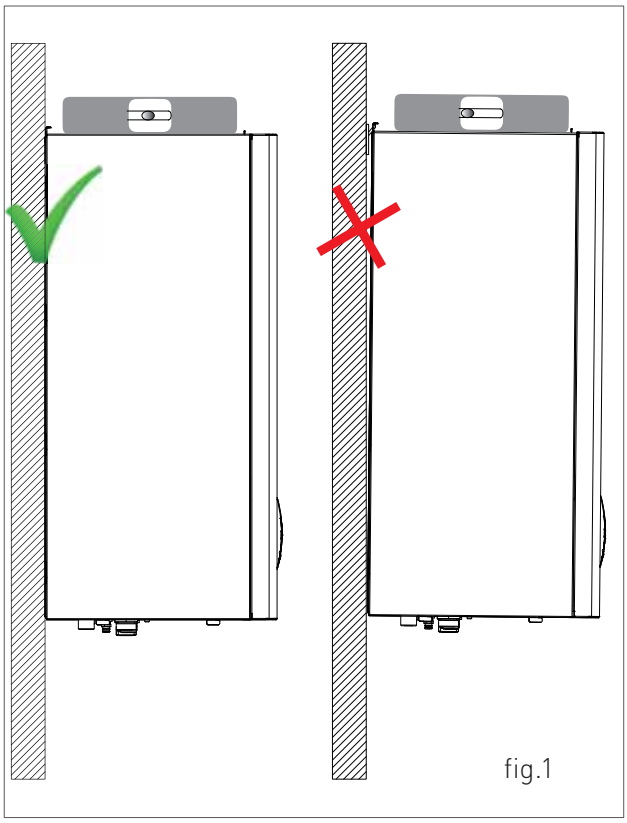

fig.1

1.1.8. CIRCULATOR PREVALENCE/FLOW DIAGRAM

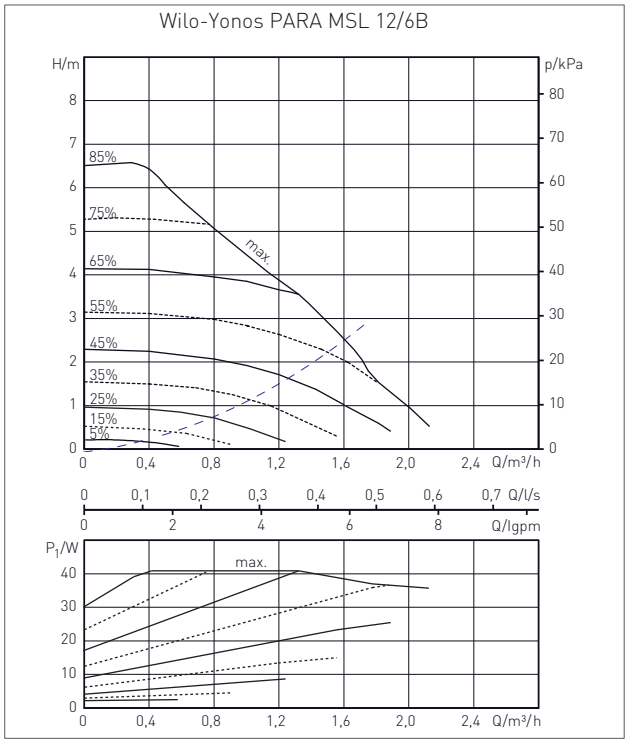

Appliance Loss

1.1.9. HYDRAULIC CONNECTION

DANGER

Make sure that the tubes of the water and heating plant are not used as grounding system for the electrical plant. There are not suitable for such use.

WARNING

To prevent voiding the warranty and to ensure the proper operation of the boiler, please wash the plant (if possible when hot) with suitable pickling or descaling solutions in order to remove the impurities coming from tubes and radiators.

WARNING

If the boiler is installed in a hydrostatic position lower than those of the user devices (radiators, fan coils, etc.), mount the shut-off valves on the domestic water heating circuit to ease the performance of the maintenance operations if it is necessary only to empty the boiler.

WARNING

When connecting the equipment to water supply, avoid excessive bending and recovery operations from any off axis positioning that may damage the tubes causing leaks, malfunction or early wear.

WARNING

In order to avoid any vibrations and noises, do not use tubes with small diameters or elbows with small radius and significant cut-off of the passage sections.

HEATING CIRCUIT

In order to avoid any scale or deposits on the primary exchanger, the hardness of the heating circuit infeed water should not exceed 25 °f. However, please check the characteristics of the water used and install suitable treating devices.

This treatment is mandatory if frequent episodes of return water or partial or total emptying of the plant occur.

Connect the boiler safety drains (heating circuit safety valve) to a discharge funnel. The manufacturer is not responsible for any floods due to safety valve opening in case of plant overpressure.

WARNING

In case the boiler is installed as part of a low temperature circuit, please install a safety thermostat on the heating flow, which can stop the boiler activity in case of high heating flow temperature. The company assumes no liability for damage caused to persons or for failure to comply with these instructions.

1.1.10. SYSTEM FILLING

WARNING
For system filling use only clean tap water.

WARNING
If the system is filled by adding ethylene glycol-type chemical agents you have to install on the loading system a hydraulic trip unit in order to separate the heating circuit from the domestic circuit.

Before powering up the boiler, fill the system as follows:

1. Make sure the circulator is not blocked;
2. slightly loosen the cap of the circulator jolly valve (1-fig. 1) to release the air from the system;
3. slightly loosen the cap of the jolly valve placed on the top of the condensing block (fig. 3) to release the air form the top of the system;
4. open the feeding tap "R" (fig. 2);
5. release all the air;
6. use pressure gauge "M" (fig. 2) to make sure that the system pressure reaches 1.2 bar (fig. 4);
7. after performing this operation, make sure that the loading tap "R" (fig. 2) is properly closed.

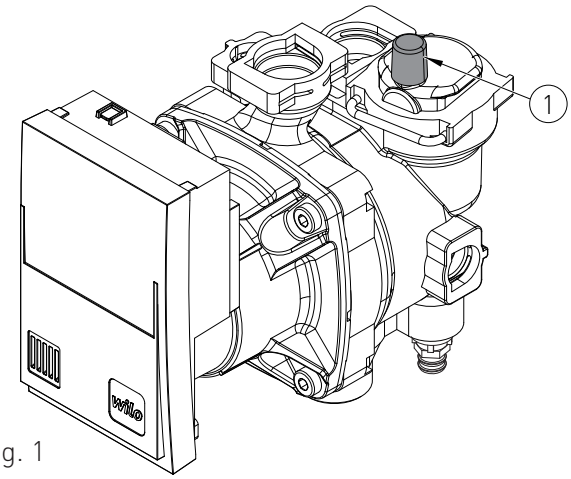

fig. 1

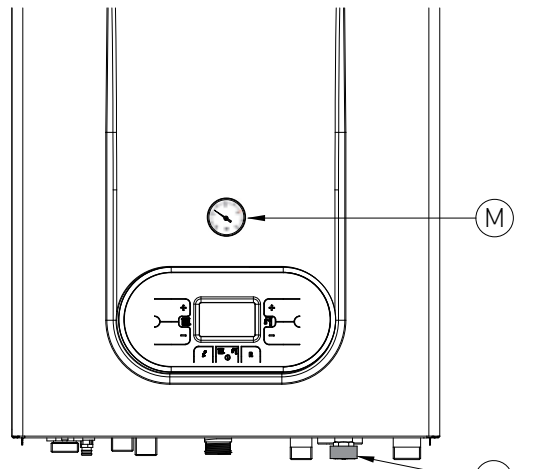

fig. 2

fig. 3
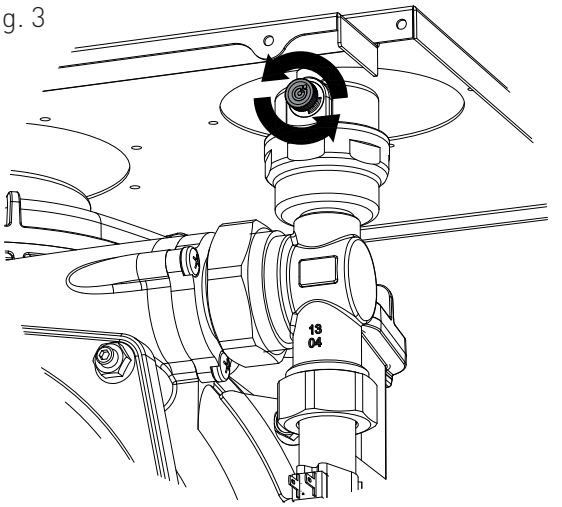

8. unscrew the circulator cap (2-fig.1) to release any air bubbles and close it to prevent water leakage;

9. open the air relief valves of the radiators and check the air removal process. When the water starts to leak close the radiators air relief valves.

10. if after performing these operations you observe a decrease of the water pressure inside the system, open once again the loading tap "R" until the pressure gauge indicates the value of 1.2 bar (fig. 4)

fig. 4

1.1.11. FILLING THE CONDENSATE COLLECTION SIPHON

Before starting the boiler you have to fill the condensate collection siphon in order to avoid fuel reflux through the siphon.

Fill the condensate collection siphon as follows (see fig. 5):

› With a glass pour the water in the heat exchanger's flue exhaust duct outlet (see fig. 5), up to fill the condensate trap to the highest point "T" (fig. 5);

› Connect the dedicated flexible condensate draining tube to a waste disposal system. The condensate can be drained directly in the sewerage system by inserting an easily serviceable siphon.

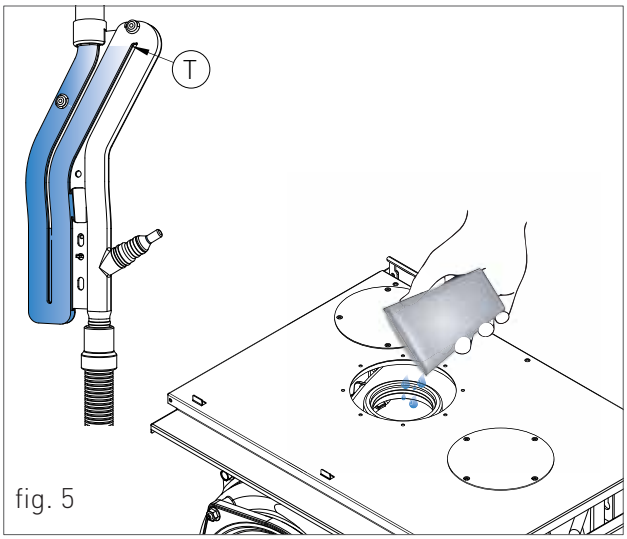

fig. 5

Rampinelli_MAH4_RIK_PM_SIFONEREDAPLAST_EN

1.1.12. ANTI-FREEZE PROTECTION

The boiler is protected against freezing thanks to the electronic board preparation with functions that start the burner and heat the concerned parts when their temperature goes below the minimum pre-set values, protecting the boiler up to an external temperature of -10 °C.

The device starts when the hot water temperature goes below 12°C, automatically starting the burner until the heating flow water temperature reaches the 30°C and, in presence of a return sensor, until the heating return water temperature reaches the 20°C.

The system starts even if on the display appears "OFF", as long as the boiler is connected to the power (230 V) and gas supply.

For long periods of standby, please empty the boiler and the plant.

If the temperature goes below -10° centigrades, please fill the plant with anti-freeze liquid (CLEANPASS FLUIDO AG cod. 98716LA) and insert and electrical resistances kit (cod. 82259LP).

DILUTION PERCENTAGE OF CLEANPASS FLUIDO AG

ANTIFREEZE - ETHYLENE GLYCOL (%) VOLUME	TEMPERATURE FREEZING POINT (°C)
20	-7.5
30	-13
35	-18
40	- 22.5
45	-28
50	-33.5
55	-42
60	-50

RECOMMENDED MINIMUM PERCENTAGE OF GLYCOL : 20 %

1 Protezione antigelo_firm.L181E_EN

1.1.13. GAS CONNECTION

DANGER

In order to connect the gas connector of the boiler to the supply pipe use a stop seal of an appropriate size and material. The use of hemp, teflon tape or similar materials is strictly forbidden.

BEFORE PERFORMING THE GAS CONNECTION, MAKE SURE THAT:

- the gas adduction line complies with the standards and regulations in force;
- the tubing's section suits the requested capacity and its length;
- the tubing is equipped with all safety and control devices required by the standards in force;
- the internal and external seals of the gas infeed plant are checked;
- the device is suitable for use with the type of gas available by checking the boiler data plate (placed on the inner side of the front casing. If they do not match you must take the necessary measures to adapt the boiler to another type of gas (see chapter GAS TRANSFORMATION);
- the gas supply pressure falls within the values indicated on the data plate.

1.1.14. ELECTRICAL CONNECTION

DANGER

The equipment is electrically safe only if it is properly connected to an efficient grounding system, performed in compliance with the safety standards in force. You should check this essential safety requirement. If in doubt, request an accurate check of the electrical system performed by qualified staff, as the manufacturer is not responsible for any damages caused by lack of grounding system.

- Make sure that the electrical systems is suitable for the maximum power absorbed by the equipment, value indicated on the data plate.
- make sure that the cables section is appropriate for the maximum power absorbed by the equipment and that it is however not lower than 1 mm^2.
- The equipment works with alternating current of 230 V and 50 Hz. The electrical connection must be performed using an all-pole switch with an opening of at least 3 millimetres between contacts placed upstream from the device.

WARNING

Make sure that the phase and neutral cables connection is performed in compliance with the wiring diagram (see chapter POWER SUPPLY).

WARNING

It is strictly forbidden the use of adaptors, multiple plugs and/or extensions for the general power supply of the equipment from the electrical network.

1.1.15. POWER SUPPLY

To power the boiler connect the electrical cables to the terminal inside the control panel as follows:

DANGER
Cut off the voltage from the main switch.

› remove the boiler's front casing (refer to chapter ACCESSING THE BOILER).

› loosen the two screws and remove the plate "A" (see fig. 1).

› after removing the plate, connect the electrical cables to terminal "B" (see fig. 1):

- the yellow/green cable to the terminal marked with grounding symbol "⏚".
- the blue cable to the terminal marked with "N".
- the brown cable to the terminal marked with "L".

After performing these operations, remount plate "A" and the front casing.

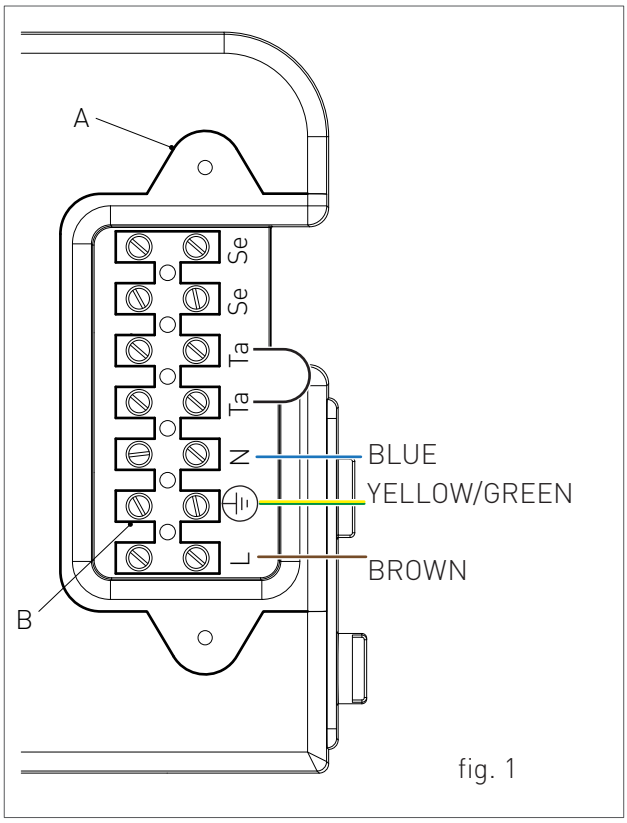

fig. 1

1.1.16. OPTIONAL ELECTRICAL CONNECTIONS

The cables should be inserted inside the boiler using the cable glands 'P1' and 'P2' placed under the board (see fig. 1). Make a hole on the cable gland, smaller than the cable diameter, to make sure that the air cannot pass through.

To wire the optionals below:

- **(SE) EXTERNAL TEMPERATURE PROBE COD. 73518LA**

- **(TA) ENVIRONMENT THERMOSTAT**

- **(CR) REMOTE CONTROL OPEN THERM COD. 40-00017**

use the terminal placed inside the control panel as follows:

DANGER
Cut off the voltage from the main switch.

› remove the front casing of the boiler (see chapter ACCESSING THE BOILER); unscrew the screws and remove plate "A" (see fig. 2).

› After removing the plate, connect the electrical cables to terminal "B" (see fig. 2):

· For the external temperature Probe connect the two non-polarized conductors to the Se-Se contacts.

· For the environment Thermostat or Remote control, first remove the bridge on the Ta-Ta contacts and then connect the two non-polarized conductors to the Ta-Ta contacts.

After performing these operations, remount plate "A" and the front casing.

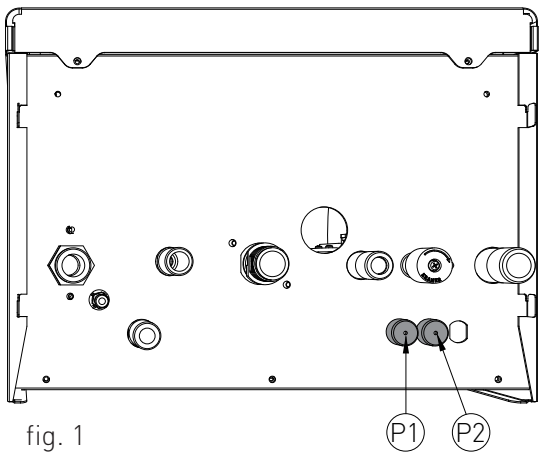

fig. 1

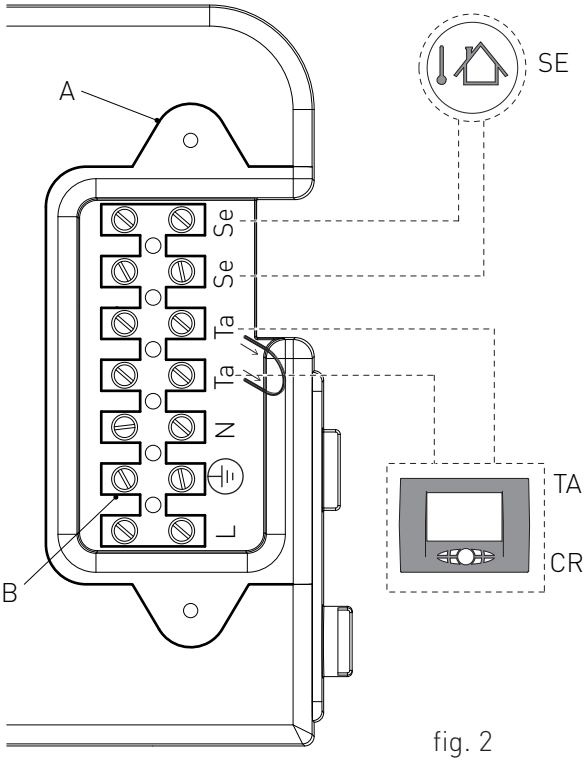

fig. 2

NB: In case of simultaneous presence of external probe and remote control, the modulation board only sends the external temperature value to the remote device without using it for modulation. The communication between board and remote control takes place independently from the boiler's operating mode and after establishing the connection, the used interface on the board is disabled and the display shows the symbol '⟲'.

To wire the optionals below:

- **(TP) DOMESTIC HOT WATER PRE-HEATING DEACTIVATION TIMER**
- **(CT) TELEPHONE DIALER**
- **BUS 0-10V**
- **(SVZ) CONTROL BOARD FOR AREA VALVES CONNECTED TO A REMOTE CONTROL COD. 65-00030**

use the electronic board placed inside the control panel as follows:

DANGER

Cut off the voltage from the main switch.

› remove the boiler's front casing (refer to chapter ACCESSING THE BOILER).

› remove the crankcase of the control panel (see chapter ACCESSING THE ELECTRONIC BOARD).

› after removing the crankcase, connect the items below to the electronic board (see fig. 1):

After performing these operations, remount the crankcase and the front casing.

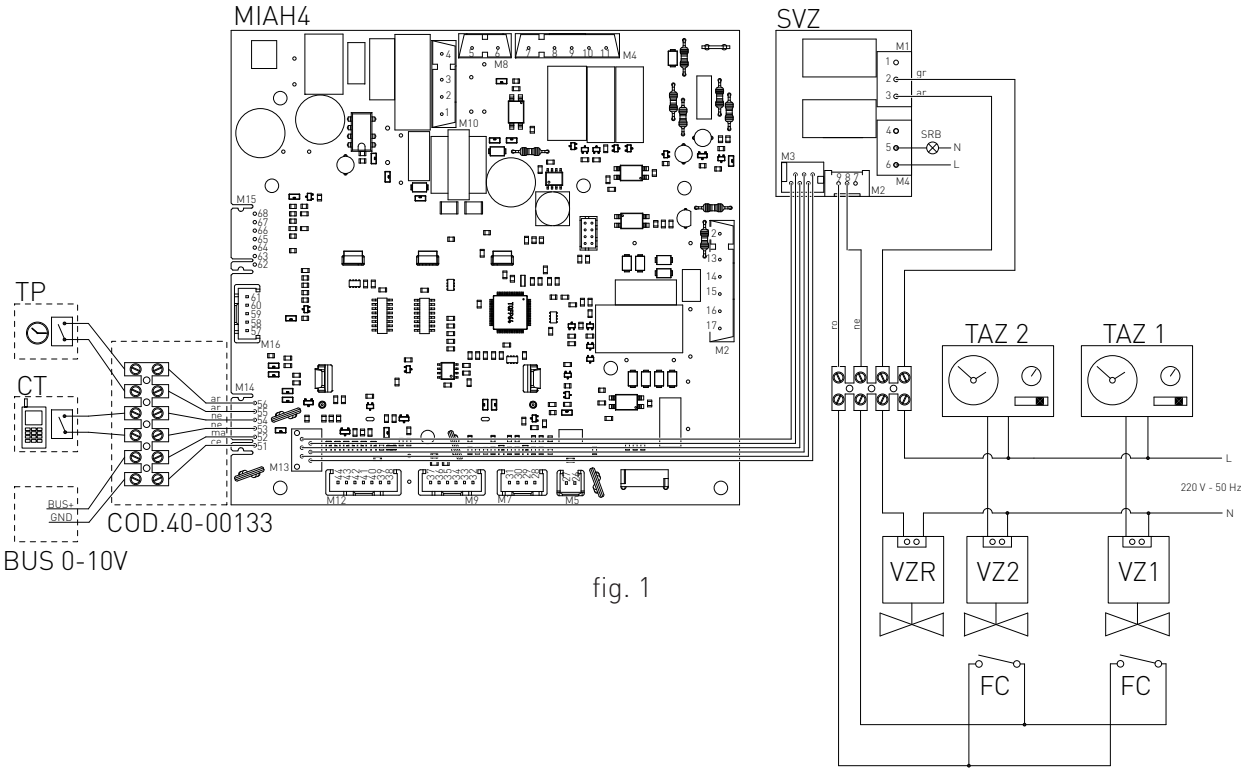

fig. 1

SR:	RETURN PROBE	FC:	AREA VALVES LIMIT SWITCH
SRB:	REMOTE LED FOR SIGNALLING BOILER BLOCK	GR:	GREY
TAZ1:	ENVIRONMENT THERMOSTAT AREA 1	AR:	ORANGE
TAZ 2:	ENVIRONMENT THERMOSTAT AREA 2	NE:	BLACK
VZ1:	AREA 1 VALVE	MA:	BROWN
VZ2:	AREA 2 VALVE	CE:	LIGHT BLUE
VZR:	REMOTE CONTROLLED AREA VALVE	RO:	RED

1.1.17. FUME EXHAUST FITTINGS

WARNING

In order to ensure proper operation and efficiency of the device you have to connect the boiler fume exhaust fitting to the fume exhaust duct using appropriate polypropylene flue fittings for condensing boilers. It is recommended to install discharge systems approved by Radiant.

WARNING

You cannot use traditional flue fittings for the discharge ducts of the condensing boilers, nor vice versa.

WARNING

For fumes exhaust and condensate collection, please follow the technical standards in force.

- For all discharge ducts, with regard to the fumes path, you should provide an uphill slope (outwards) so as to favour the reflux of the condensate towards the combustion chamber, suitably realized to collect and drain acid condensate.
- For all air suction ducts, with regard to the air path, you should provide an uphill slope (towards the boiler) so as to avoid the protrusion inside the duct of rain water, dust or foreign objects.
- In case of horizontal co-axial system installation, correctly place the horizontal co-axial terminal suitably realized to respect the slopes inside the fumes duct and to protect the air suction duct from adverse weather conditions.
- In order to discharge the fumes through a fumes exhaust duct carefully follow the technical standards in force.
- Make sure that the discharge tube doe not protrude inside the fumes exhaust duct, stop before it reaches the inner surface of the latter.
- The discharge duct must be perpendicular with the opposite internal wall of the chimney or of the fumes exhaust duct (fig. 1).

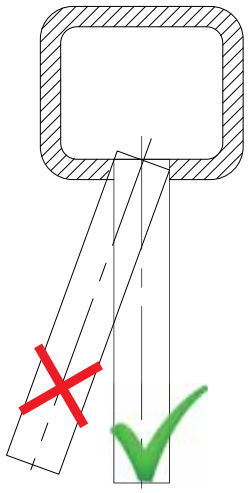

fig. 1

1.1.18. INSTALLATION MODES

For this type of boiler are available the following fumes discharge configurations: B23P, B33, C13, C33, C43, C53, C63, C83 e C93 (see Fig. 1).

- B23P- Indoor suction and outdoor discharge.
- B33- Indoor suction and fumes exhaust duct discharge.
- C13- Concentric wall discharge. The tubes can be split but the outputs must be concentric or close enough to each other to undertake similar wind conditions (within 50 cm).
- C33- Roof concentric discharge. Outputs as for C13.
- C43- Discharge and suction in common separated fume exhaust ducts, subjected to similar wind conditions.
- C53- Roof or wall separated discharge and suction, in areas with different pressures. The suction and discharge inlets should not be placed on opposite walls.
- C63- Discharge and suction systems made with tubes commercialized and certificated separately.
- C83- Discharge in single or common fume exhaust duct and wall suction system.
- C93- Discharge through an intubated conduct to a vertical terminal. The technical compartment in which is housed the discharge, also plays the role of combustion air suction duct through the gap that will be formed.

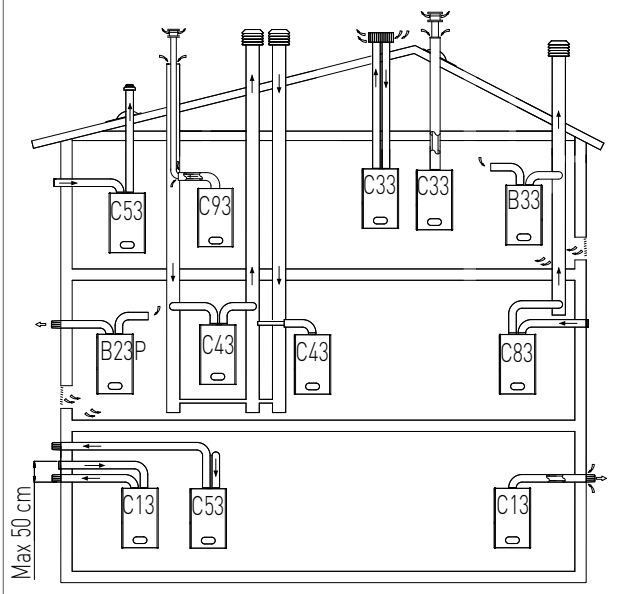

fig. 1

DISCHARGE OF COMBUSTION PRODUCTS FOR C63-TYPE DEVICES

Each flue fitting has a resistance factor that correspond to a certain tube length (of the same diameter) expressed in metres. These data are provided by the flue fittings distributor. Each boiler has a maximum allowed resistance factor, expressed in Pascal, corresponding to the maximum tubes length with any type of Kit. The maximum allowed strength factor of the ducts installed in this boiler, that should not be exceeded, is specified in the 'TECHNICAL SPECIFICATIONS' section. All this information allow us to perform the necessary calculations to check the possibilities of realizing the most diverse flue fitting configurations.

The ducts must be certified for this specific use and for a temperature greater than 100 °C.

DISCHARGE OF COMBUSTION PRODUCTS FOR B-TYPE DEVICES

The gas devices, provided with connection for fumes exhaust tube, must be directly connected to efficient chimneys or fume exhaust ducts: only if these are missing you can discharge the combustion products directly through the gas devices.

The connection to the chimney or to the fume exhaust ducts must respect the following requirements:

- Be sealed and realised in materials suitable to resist normal mechanical stress, heat, the action of combustion products and any condensate forming;
- have no more than three changes in direction, including the chimney and/or fume exhaust duct inlet connection, made with internal angles greater than 90°. The changes in direction must be made only by using curved curved elements;
- have the axis of the inlet end perpendicular to the internal wall opposite to the chimney or fume exhaust duct;
- have, along its entire length, a section equal to or greater then that of the connection of the device discharge tube;
- have no shut-off devices (shutters).
- for direct external discharge there must be no more than two changes in direction.

LOCATIONS VENTING FOR B-TYPE DEVICES

The locations in which are installed gas devices must be vented so as to ensure the amount of air necessary for a regular combustion and for location ventilation. The natural air intake must take place directly through:

- permanent openings on the external walls of the location (windows);
- single or collective, ramified ventilation ducts.

The openings on the external walls of the location must respect the following requirements:

- have a net overall free passage section of at least 6 cm^2 for every kW of heat capacity installed with a minimum of 100 cm^2;
- they must be realized so as to make sure that the opening inlets are not obstructed (neither indoors nor outdoors);
- they must be protected with grids, metal meshes, etc. so as to keep the useful section mentioned above.
- they must be placed at a height next to the floor level such as to allow proper operation of the combustion products discharge systems; if such position can not be obtained, please increase by at least 50% the section of the vents.

Tipologia installazione_B22P-B33-C13-C33-C43-C53-C63-C83-C93_EN

1.1.19. TYPES OF FUME EXHAUST SYSTEMS

KIT AK 50 - HORIZONTAL CO-AXIAL SYSTEM Ø80/125 INTERNAL POLYPROPYLENE DUCT ADJUSTABLE AT 360°.

It allows fumes discharge and air intake from external wall.

Suitable only for condensing boilers.

It allows fuel gas discharge and air intake for combustion through co-axial ducts, the external one for air intake, the plastic internal one for fumes discharge.

PLEASE SEE THE MAXIMUM DISCHARGE LENGTH IN THE TABLE IN CHAPTER "TECHNICAL DATA".

The maximum discharge length (or linear reference length) can be calculated summing the length of the linear tube and that equivalent to each additional curve with respect to the first.

Subsequent addition of a curve is similar to adding a linear length of tube according to the indications below:

co-axial curve Ø80/125 at 90° = 0.8 m

co-axial curve Ø80/125 at 45° = 0.5 m

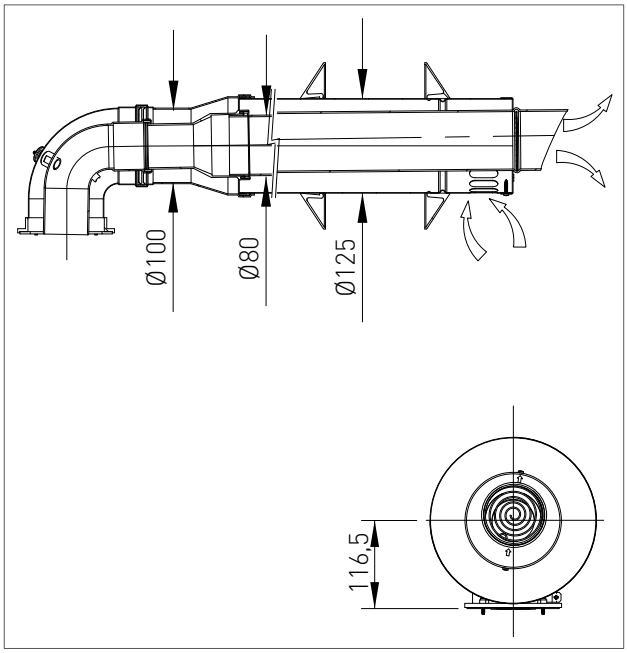

KIT H - HORIZONTAL SPLIT SYSTEM Ø80/80 MADE OF POLYPROPYLENE, ADJUSTABLE AT 360°.

The two tubes system allows fumes discharge through the fumes exhaust duct and air intake from outside.

Suitable only for condensing boilers.

It allows discharging fuel gas and air suctioning for combustion through two separated ducts.

PLEASE SEE THE MAXIMUM DISCHARGE AND INTAKE LENGTH IN THE TABLE IN CHAPTER "TECHNICAL DATA".

The maximum discharge and intake length (or linear reference length) can be calculated summing the length of the linear tube and that equivalent to each additional curve with respect to the first.

Subsequent addition of a curve is similar to adding a linear length of tube according to the indications below:

curve Ø80 at 90°= 1.5 m

curve Ø80 at 45°= 1.2 m

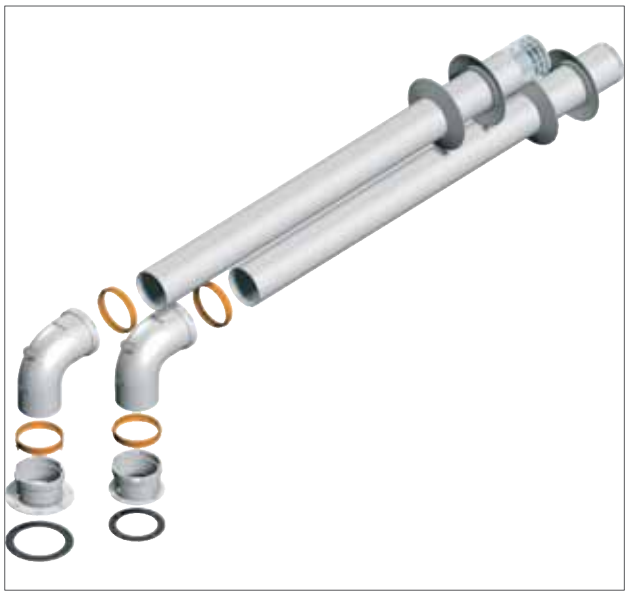

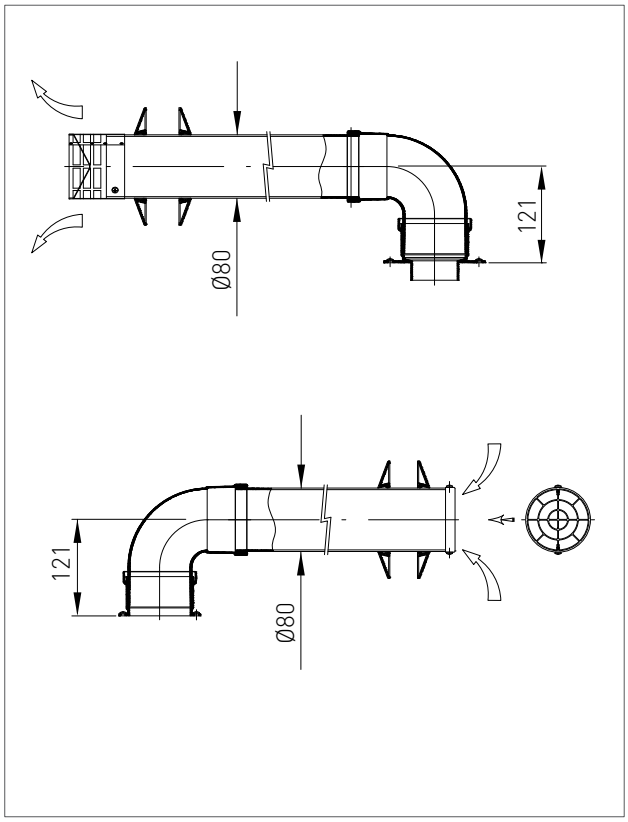

KIT CK 50 - VERTICAL CO-AXIAL SYSTEM Ø80/125 INTERNAL POLYPROPYLENE DUCT.

It allows fumes discharge and air intake directly from roof.

Suitable only for condensing boilers.

It allows fuel gas discharge and air intake for combustion through co-axial ducts, the external one for air intake, the plastic internal one for fumes discharge.

PLEASE SEE THE MAXIMUM DISCHARGE LENGTH IN THE TABLE IN CHAPTER "TECHNICAL DATA".

The maximum discharge length (or linear reference length) can be calculated summing the length of the linear tube and that equivalent to each additional curve with respect to the first.

Subsequent addition of a curve is similar to adding a linear length of tube according to the indications below:

curve Ø80/125 at 90° = 0.8 m

curve Ø80/125 at 45° = 0.5 m

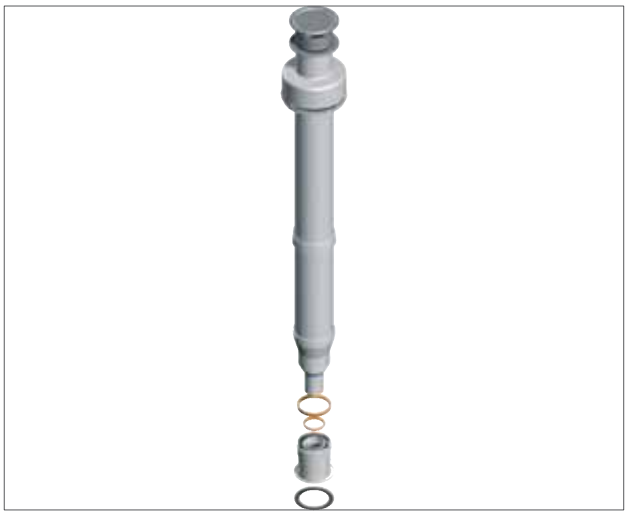

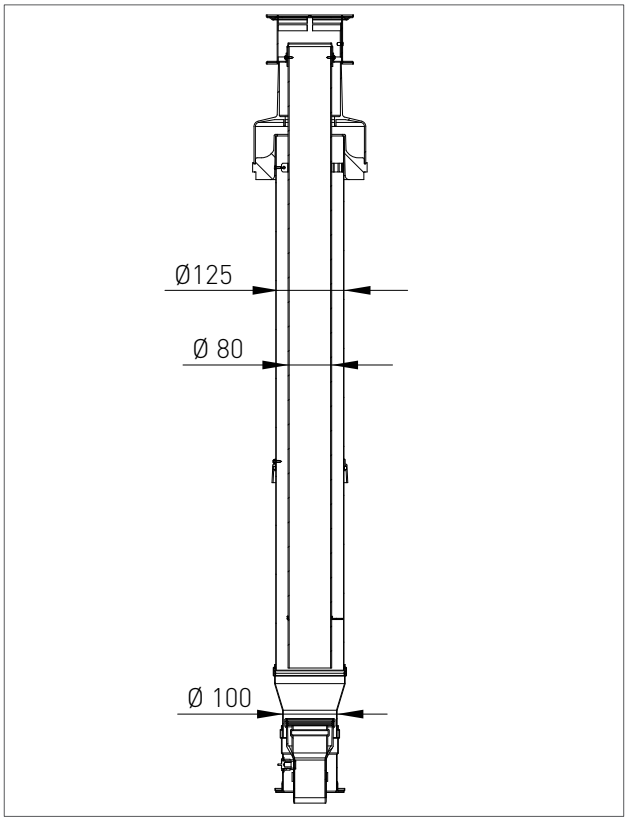

2. SUPPORT CENTRE SECTION

All operations described below relative to first start-up, maintenance and replacement should be performed only by qualified personnel and authorized by RADIANT BRUCIATORI S.p.A.

2.1. FIRST START-UP

2.1.1. PRELIMINARY OPERATIONS FOR FIRST START-UP

The first start-up operations consist in checking the correct installation, adjustment and operation of the device. Proceed as follows:

- check the inner system sealing in accordance with the indications provided by standard and regulations in forced;
- check if the gas used is suitable for the boiler;
- check if the gas capacity and relative pressures comply with those on the plate;
- check the intervention of the safety device in case of lack of gas;
- make sure that the device supply voltage corresponds with that on the plate (230 V – 50 Hz) and that the wiring is correct;
- make sure that the grounding system works properly;
- make sure that the combustion air adduction and fumes and condensate discharge take place properly in compliance with the Local and National Laws and Standards in force;
- make sure that the fumes discharge tube and its connection to the fume exhaust duct comply with the requirements of the Local and National Laws and Standards;
- make sure that the heating system gate valves are open;
- make sure that there is no intake of gaseous products within the system;
- make sure that there are no flammable liquids or materials near the device;
- open the boiler gas tap and make sure that there are no gas leaks upstream from the device (the burner gas connection must be checked while the machine is running);
- in case of new installation of the gas supply network, the air inside the tubes may block the device at its first start-up. You might have to repeat the start-up procedure to purge all the air inside the tube.

2.1.2. BOILER COMMISSIONING

WARNING

Make sure that the system is correctly filled.

Proceed with boiler commissioning as follows:

Make sure the gas feed valve is switched off

› Power the boiler.

THE START-UP SYSTEM WILL AUTOMATICALLY ACTIVATE THE SYSTEM AIR RELIEF CYCLE FUNCTION DISPLAYED ON SCREEN WITH CODE "F33" (ONLY AT FIRST START-UP WILL LAST FOR 5 MINUTES*). When function "F33" is active, the pump is enabled and the burner start-up request is disabled. The boiler can work normally only after completing the operation.

› Make sure the circulating pump is unblocked.

› If it should be blocked, wait for the circulating pump to activate the automatic reset (lasting 3 min.)

› If the circulating pump should be still blocked, activate the circulating pump automatic reset again (further 3 minutes), and switch off the power supply and switch it on again.

› Open the gas tap.

› Use the button '' to select the desired operation mode. If the symbol is displayed fixed, it means that the function has been activated.

› The burner will start as soon as the thermostat contact is closed ;

› If the flame is missing, the board will repeat the start-up operations after post-ventilation (20 seconds).

› You might have to repeat the start-up operation several times to release all the air inside the gas tube. Before repeating the operation, wait at least 5 seconds from the last start-up attempt and unlock the boiler from "E01" error code by pressing the Reset 'R' key.

(*) The boiler performs the system venting cycle function (5 minutes) only during the first starting. After every water pressure reset the boiler will automatically perform a reduced system venting cycle (2 minutes). During this function the display shows F33 code. The correct boiler operation will be allowed only after this operation has been completed.

2.1.3. CO2 VALUE CHECK AND CALIBRATION

WARNING

The CO_2 value should be checked with the casing assembled, while the gas valve should be adjusted with the casing open.

To check and calibrate the CO_2 value to minimum and maximum heating power proceed as follows:

FOR MINIMUM HEATING POWER

› Activate the chimney sweeper function (F07) by keeping pressed the key 'R' for 7 seconds (the maximum time of this function is 15 minutes).

› Insert the fumes analyser probe in the suitable 'PF' fumes inlet (fig. 1), then make sure that the CO_2 value complies with the requirements indicated in chapter "Technical data", otherwise unscrew the protection screw 'A' (fig. 2) and adjust using a 4 Allen wrench the screw '2' (fig. 2) of the Off-Set adjuster. To increase the CO_2 value, turn the screw clockwise and vice-versa if you want to decrease it. Once completed the adjustment, tighten the protection screw 'A' (fig. 2) on the Off-Set adjuster.

FOR MAXIMUM HEATING POWER

› Press the key '⊕' of the heating temperature setting, to adjust the maximum heating power.

› Make sure that the CO_2 value complies with the indications in "Technical data", otherwise adjust using screw '1' (fig. 2) of the gas flow adjuster. To increase the CO_2 value, turn the screw anti-clockwise and vice-versa if you want to decrease it.

› After each adjustment variation on screw '1' (fig. 2) of the gas flow adjuster you have to wait for the boiler to stabilize itself to the set value (about 30 seconds).

› Press the key '⊖' of the heating temperature setting and make sure that the CO_2 value did not change to minimum, if changed repeat the calibration described in the previous paragraph.

› Deactivate the chimney sweeper function by selecting the OFF mode by using the key 'OFF'.

fig. 1

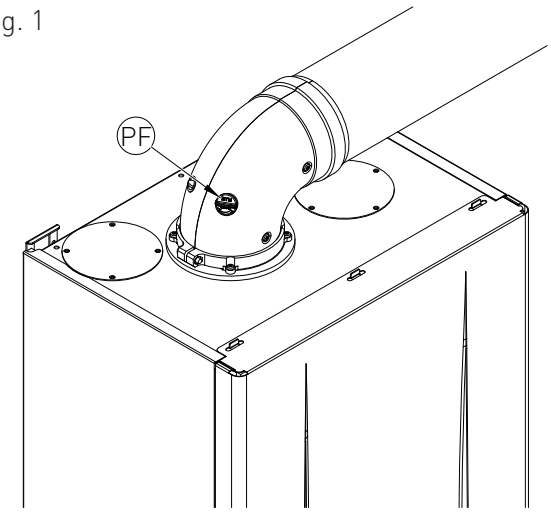

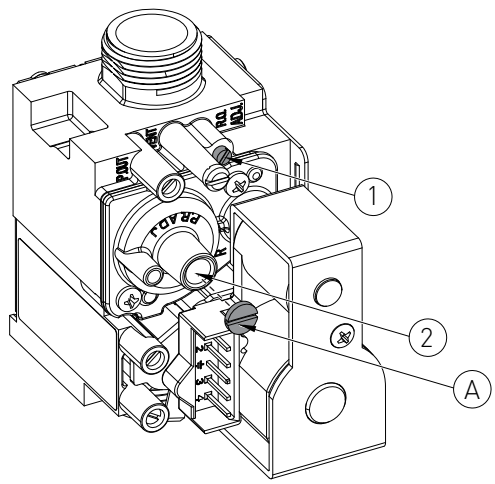

fig. 2

2/verificataraturaedvalorediCO2_MIAH4_R2K_frmL181E_EN

2.1.4. ACCESSING AND PROGRAMMING THE PARAMETERS

To access the parameters menu and adjust their values, follow the procedure below:

1. Press the button ' ' to select the OFF mode displayed using the symbol ' '.

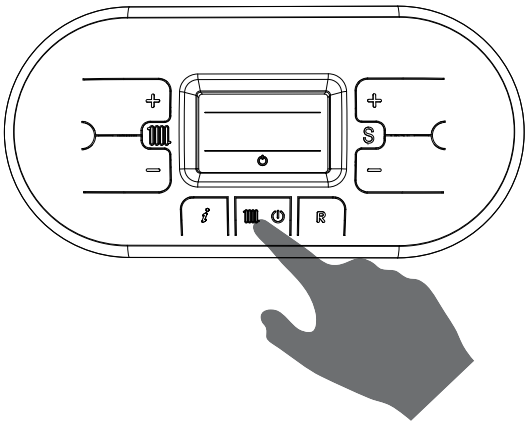

2. Hold at the same time the keys ' ' and ' ' until on the display appears the symbol ' ' with the message 'P00', and release the keys ' ' and ' '.

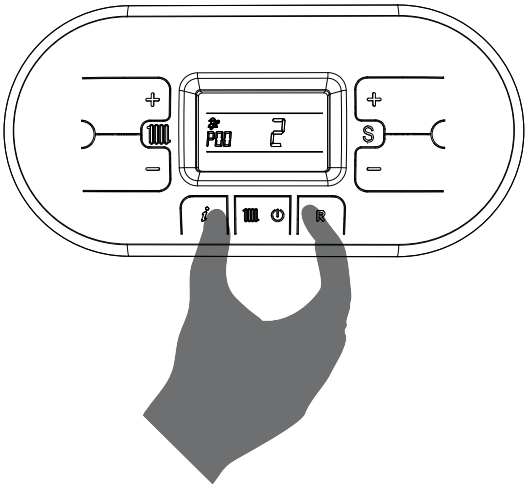

3. Use the keys ' ' and ' ' of the heating circuit to select the parameter to be edited.

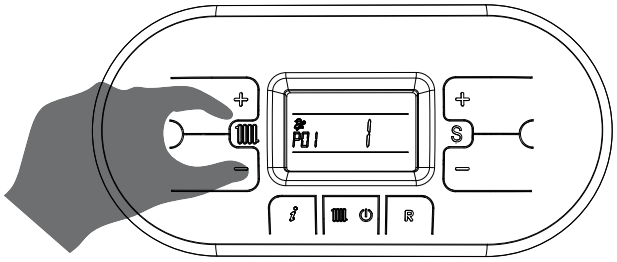

4. Use the keys '⊕' and '⊖' of the symbol 'S' (S) to change the value of the parameter.

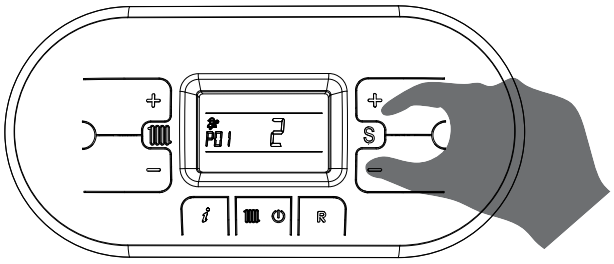

5. Press the key '⏻' to confirm the action and wait for the display to stop blinking, indication of the fact that the adjustment was implemented.

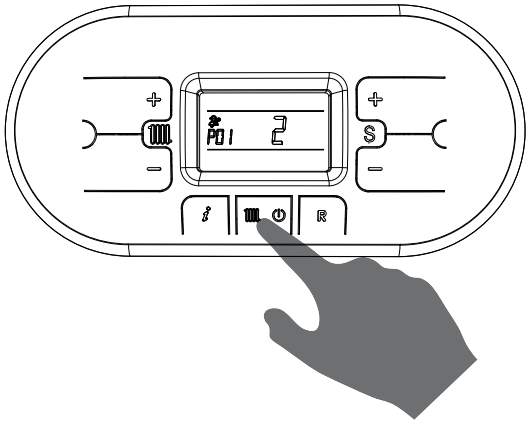

6. To exit the parameters menu, hold at the same time the keys 'ⓘ' and 'Ⓡ' and wait for the symbol '⏻' to appear on the display.

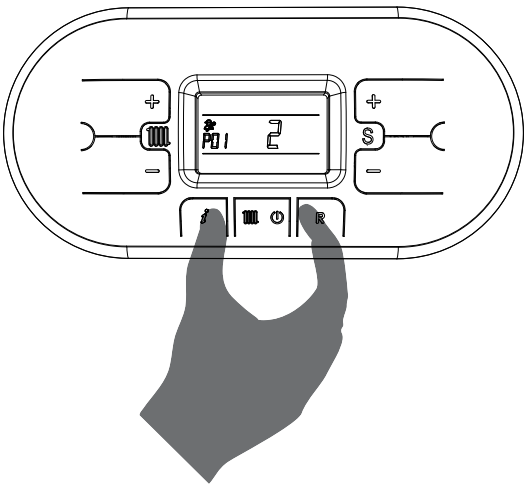

2.1.5. DIGITECH CS PARAMETERS TABLE

PARAMETER	DESCRIPTION	RANGE	FUNCTION
P00	***BOILER MODEL SELECTION***	0 - 10	0 = 13 KW
			1 = 18 KW (HEAT.) / 24 KW (DOMESTIC)
			2 = 25 KW
			3 = 28 KW
			4 = 34 KW
			5 = 55 KW
			6 = 100 KW
			7 = R1K 18_24-R2K 24-R2KA 24 (IN ALL VERSIONS)
			8 = R1K 25_28-R2K 28-R2KA 28 (IN ALL VERSIONS)
			9 = R1K 34-R2K 34-R2KA 34 (IN ALL VERSIONS)
			10 = R1K 50
P01	***BOILER TYPE SELECTION***	0 - 5	0 = ISTANTANEOUS R2K
			1 = ISTANTANEOUS RKR
			2 = ACCUMULATION
			3 = ACCUMULATION COMFORT
			4 = ISTANTANEOUS COMFORT - FAST H2O
			5 = HEATING ONLY

PARAMETER	DESCRIPTION	RANGE	FUNCTION
P02	***GAS TYPE SELECTION*** ***ATTENTION:*** READ THE INSTRUCTION IN CHAPTER 'GAS TRANSFORMATION' BEFORE CHANGING THIS PARAMETER.	0 - 1	0 = METHANE 1 = LPG
P03	***SETTING THE HEATING TEMPERATURE*** IN CASE THE BOILER IS INSTALLED AS PART OF A LOW TEMPERATURE CIRCUIT, PLEASE INSTALL A SAFETY THERMOSTAT ON THE HEATING FLOW, WHICH CAN STOP THE BOILER ACTIVITY IN CASE OF HIGH HEATING FLOW TEMPERATURE. THE COMPANY ASSUMES NO LIABILITY FOR DAMAGE CAUSED TO PERSONS OR FOR FAILURE TO COMPLY WITH THESE INSTRUCTIONS.	0 - 1	0 = STANDARD (30-80 °C) (SET BY DEFAULT) 1 = REDUCED (25-45 °C) FOR FLOOR SYSTEMS
P04	***HEATING RUN-UP*** THROUGH THIS PARAMETER YOU CAN SET THE TIME, DURING START-UP PHASE, NECESSARY FOR THE BOILER TO REACH THE MAXIMUM SET POWER (ON THE HEATING SIDE).	0 - 4	0 = (DISABLED) 1 = 50 SECONDS (SET BY DEFAULT) 2 = 100 SECONDS 3 = 200 SECONDS 4 = 400 SECONDS
P05	***ANTI-WATER HAMMER SELECTION*** ONCE THIS FUNCTION IS ENABLED, THE DHW CONTACT WILL BE DELAYED FOR A TIME EQUAL TO THE SET VALUE.	0 - 20	0 = DISABLED 1 - 20 = THE VALUE IS EXPRESSED IN SECONDS
P06	***DOMESTIC CIRCUIT PRESERVATION FUNCTION (ONLY FOR ISTANTANEOUS BOILERS)*** THROUGH THIS PARAMETER YOU CAN PRESERVE THE CIRCULATOR THE DIVERTER VALVE IN DOMESTIC POSITION FOR A PERIOD OF TIME EQUAL TO THE POST-CIRCULATION (SEE PARAMETER P09), SO AS TO MAINTAIN THE SECONDARY EXCHANGER HOT.	0 - 1	0 = DISABLED (SET BY DEFAULT) 1 = ENABLED
P07	***HEATING TIMING*** THROUGH THIS PARAMETER YOU CAN SET THE MINIMUM TIME FOR WHICH THE BURNER WILL BE TURNED OFF ONCE THE HEATING TEMPERATURE REACHED THE USER SET TEMPERATURE.	0 - 90	VALUE EXPRESSED IN MULTIPLES OF 5 SECONDS (PRE-SET AT 36 X 5 = 180 SECONDS)

PARAMETER	DESCRIPTION	RANGE	FUNCTION
P08	***POST-CIRCULATION HEATING TIMING*** THROUGH THIS PARAMETER YOU CAN SET THE PUMP DURATION OF OPERATION DURING HEATING CYCLE, AFTER THE MAIN BURNER TURNS OFF DUE TO THE ENVIRONMENT THERMOSTAT.	0 - 90	VALUE EXPRESSED IN MULTIPLES OF 5 SECONDS (PRE-SET AT 36 X 5 = 180 SECONDS)
P09	***POST-CIRCULATION DOMESTIC / BOILER TIMING*** THROUGH THIS PARAMETER YOU CAN SET THE PUMP OPERATION DURATION ON THE DOMESTIC CIRCUIT, AFTER THE TAP IS CLOSED.	0 - 90	VALUE EXPRESSED IN MULTIPLES OF 5 SECONDS (PRE-SET AT 24 X 5 = 120 SECONDS)
P10	***DOMESTIC FAN MINIMUM SPEED ADJUSTMENT*** THROUGH THIS PARAMETER YOU CAN SET THE FAN MINIMUM SPEED IN DOMESTIC PHASE, THAT CORRESPONDS TO THE MINIMUM BURNER POWER DURING A REQUEST TO OPERATE IN DOMESTIC MODE. THE VALUE IS PRE-SET BASED ON THE SET POWER (SEE PARAMETER P00) AND ON THE GAS TYPE (SEE PARAMETER P02)	45 - VALUE SET FOR PARAMETER P11	THE VALUE IS EXPRESSED IN HERTZ (1HZ = 30 RPM)
P11	***DOMESTIC FAN MAXIMUM SPEED ADJUSTMENT*** THROUGH THIS PARAMETER YOU CAN SET THE FAN MAXIMUM SPEED IN DOMESTIC PHASE, THAT CORRESPONDS TO THE MAXIMUM BURNER POWER DURING A REQUEST TO OPERATE IN DOMESTIC MODE. THE VALUE IS PRE-SET BASED ON THE SET POWER (SEE PARAMETER P00) AND ON THE GAS TYPE (SEE PARAMETER P02)	VALUE SET FOR PARAMETER P10 - 203	THE VALUE IS EXPRESSED IN HERTZ (1HZ = 30 RPM)
P12	***HEATING FAN MINIMUM SPEED ADJUSTMENT*** THROUGH THIS PARAMETER YOU CAN SET THE FAN MINIMUM SPEED IN HEATING PHASE, THAT CORRESPONDS TO THE MINIMUM BURNER POWER DURING A REQUEST TO OPERATE IN HEATING MODE. [SEE CHAPTER 'HEAT CAPACITY DIAGRAM (KW) – ELECTRIC FAN FREQUENCY (HZ)']. THE VALUE IS PRE-SET BASED ON THE SET POWER (SEE PARAMETER P00) AND ON THE GAS TYPE (SEE PARAMETER P02)	45 - VALUE SET FOR PARAMETER P13	THE VALUE IS EXPRESSED IN HERTZ (1HZ = 30 RPM)

PARAMETER	DESCRIPTION	RANGE	FUNCTION
P13	***HEATING FAN MAXIMUM SPEED ADJUSTMENT*** THROUGH THIS PARAMETER YOU CAN SET THE FAN MAXIMUM SPEED IN HEATING PHASE, THAT CORRESPONDS TO THE MAXIMUM BURNER POWER DURING A REQUEST TO OPERATE IN HEATING MODE [SEE CHAPTER 'HEAT CAPACITY DIAGRAM (KW) –ELECTRIC FAN FREQUENCY (HZ)']. THE VALUE IS PRE-SET BASED ON THE SET POWER (SEE PARAMETER P00) AND ON THE GAS TYPE (SEE PARAMETER P02)	VALUE SET FOR PARAMETER P12 - 203	THE VALUE IS EXPRESSED IN HERTZ (1HZ = 30 RPM)
P14	***STARTING STEP ADJUSTMENT*** THROUGH THIS PARAMETER YOU CAN SET THE FAN SPEED DURING START-UP THE VALUE IS PRE-SET BASED ON THE SET POWER (SEE PARAMETER P00) AND ON THE GAS TYPE (SEE PARAMETER P02)	VALUE SET FOR PARAMETER P10 - 203	THE VALUE IS EXPRESSED IN HERTZ (1HZ = 30 RPM)
P15	***ANTI-LEGIONELLA FUNCTION (FOR STORAGE BOILERS ONLY)*** THROUGH THIS PARAMETER YOU CAN ACTIVATE/DEACTIVATE THE "ANTILEGIONELLA" HEAT TREATMENT OF THE STORAGE TANK. EVERY 7 DAYS THE WATER TEMPERATURE INSIDE THE STORAGE IS HEATED BEYOND 60 °C THUS GENERATING A BURNING HAZARD. KEEP UNDER CONTROL SUCH DOMESTICH HOT WATER TREATMENT (AND INFORM THE USERS) TO AVOID UNFORSEEABLE DAMAGES TO PERSONS, ANIMALS AND PROPERTY. A THERMOSTATIC VALVE SHOULD BE INSTALLED AT THE DOMESTIC HOT WATER OUTLET TO AVOID ANY BURNS.	0 - 1	0 = DISABLED 1 = ENABLED (PRE-SET BY DEFAULT ON STORAGE BOILERS ONLY)

PARAMETER	DESCRIPTION	RANGE	FUNCTION
P16	***CLIMATE COMPENSATION CURVE (ONLY WITH EXTERNAL PROBE CONNECTED)*** YOU CAN CONNECT AN EXTERNAL TEMPERATURE PROBE (SEE CHAPTER 'ELECTRICAL CONNECTIONS') THAT AUTOMATICALLY CHANGES THE DELIVERY TEMPERATURE BASED ON THE EXTERNAL MEASURED TEMPERATURE. THE NATURE OF THE CORRECTION DEPENDS ON THE THERMO-ADJUSTMENT VALUE KD SET (SEE CHART). THE SELECTION OF THE CURVE IS DETERMINED BY THE MAXIMUM DELIVERY TEMPERATURE TM AND THE MINIMUM EXTERNAL TEMPERATURE TE TAKING INTO ACCOUNT THE HOUSE INSULATION DEGREE. THE VALUES OF THE DELIVERY TEMPERATURES TM, REFER TO STANDARD SYSTEMS 30-80 °C OR FLOOR SYSTEMS 25-45 °C. THE SYSTEM TYPE CAN BE SET FROM PARAMETER P03.	0 - 30	(SET BY DEFAULT AT 15) THE NUMBERING OF THE VALUE CORRESPONDS TO 'KD' CURVES ON THE CHART (SEE CHART BELOW).

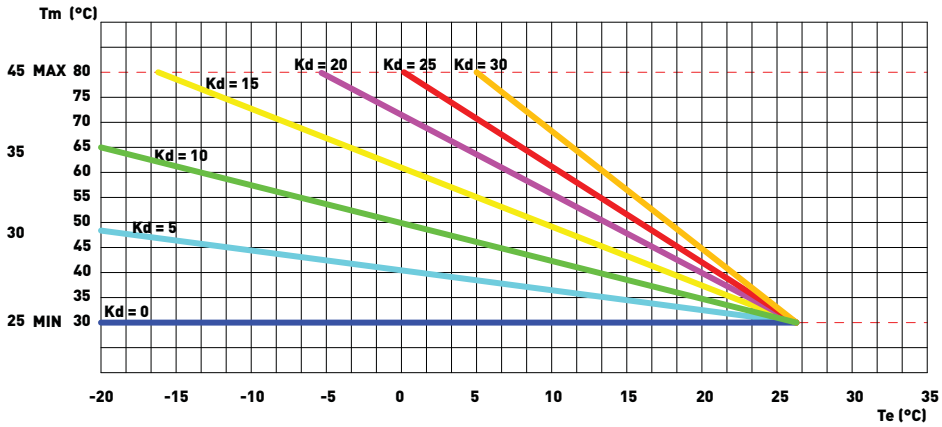

P17	***DISABLEMENT OF DOMESTIC HOT WATER LINE BY MEANS OF SWITCH (ONLY FOR FAST BOILERS)*** BY ENABLING THIS PARAMETER IN THE PRESENCE OF A CONNECTION (FOR EXAMPLE A BOILER CLOCK OR A TEMPERATURE THERMOSTAT) ON BOILER CLOCK SWITCH ON THE BOARD, THE REQUEST FOR BURNER IGNITION ON THE DOMESTIC HOT WATER LINE WILL BE DISABLED UPON BOILER CLOCK SWITCH CLOSURE. ***EXAMPLE 1:*** WITH THE BOILER CLOCK SWITCH OPEN, UPON THE REQUEST FOR DOMESTIC HOT WATER, THE FLOW SWITCH AND THE BOILER WILL TURN ON. ***EXAMPLE 2:*** WITH THE BOILER CLOCK SWITCH CLOSE, UPON THE REQUEST FOR DOMESTIC HOT WATER, THE FLOW SWITCH AND THE BOILER WILL NOT TURN ON.	0 - 1	0 = DISABLED (SET BY DEFAULT) 1 = ENABLED

PARAMETER	DESCRIPTION	RANGE	FUNCTION
P18	***ENABLING BUS INDUSTRIAL PILOTING 0 -10V*** THROUGH THIS PARAMETER YOU CAN ENABLE OR DISABLE THE BUS INDUSTRIAL INPUT 0-10 V TO SET THROUGH EXTERNAL BUS THE BURNER POWER OR THE DELIVERY TEMPERATURE.	0 - 2	0 = DISABLED (SET BY DEFAULT) 1 = TEMPERATURE CONTROL MODE 2 = POWER CONTROL MODE
P19	***MINIMUM HEATING SETPOINT*** THROUGH THIS PARAMETER YOU CAN SET THE USER-ADJUSTABLE MINIMUM HEATING TEMPERATURE.	20 - 40	THE VALUE IS EXPRESSED IN °C
P20	***MAXIMUM HEATING SETPOINT*** THROUGH THIS PARAMETER YOU CAN SET THE USER-ADJUSTABLE MAXIMUM HEATING TEMPERATURE.	40 - 90	THE VALUE IS EXPRESSED IN °C
P21	***MAXIMUM DOMESTIC SETPOINT*** THROUGH THIS PARAMETER YOU CAN SET THE USER-ADJUSTABLE MAXIMUM DOMESTIC TEMPERATURE.	45 - 75	THE VALUE IS EXPRESSED IN °C
P22	***SET POINT ΔT DELIVERY-RETURN (ONLY WITH MODULATING PUMP AND RETURN PROBE CONNECTED)*** THROUGH THIS PARAMETER YOU CAN SET THE TEMPERATURE DIFFERENCE BETWEEN DELIVERY AND RETURN.	0 10 - 40	0 = DISABLED THE VALUE IS EXPRESSED IN °C
P23	***MODULATING PUMP MINIMUM SPEED (ONLY WITH MODULATING PUMP AND RETURN PROBE CONNECTED)*** THROUGH THIS PARAMETER YOU CAN SET THE MINIMUM SPEED VALUE OF THE MODULATING PUMP DURING A REQUEST TO OPERATE IN HEATING MODE.	50 - 70	THE VALUE IS EXPRESSED IN PERCENTAGE
P24	***MODULATING PUMP MAXIMUM SPEED (ONLY WITH MODULATING PUMP AND RETURN PROBE CONNECTED)*** THROUGH THIS PARAMETER YOU CAN SET THE MAXIMUM SPEED VALUE OF THE MODULATING PUMP DURING A REQUEST TO OPERATE IN HEATING MODE.	70 - 100	THE VALUE IS EXPRESSED IN PERCENTAGE

PARAMETER	DESCRIPTION	RANGE	FUNCTION
P25	***D.H.W STORAGE TANK TEMPERATURE SETPOINT (FOR STORAGE BOILERS ONLY)*** THROUGH THIS PARAMETER YOU CAN SET THE PRIORITY STARTING VALUE OF THE STORAGE TANK, COMPARED TO THE USER ADJUSTABLE D.H.W SETPOINT.	3 - 9	THE VALUE IS EXPRESSED IN °C (PRE-SET AT 9°C)

2.1.6. ELECTRIC FAN FREQUENCY/HEAT CAPACITY DIAGRAM

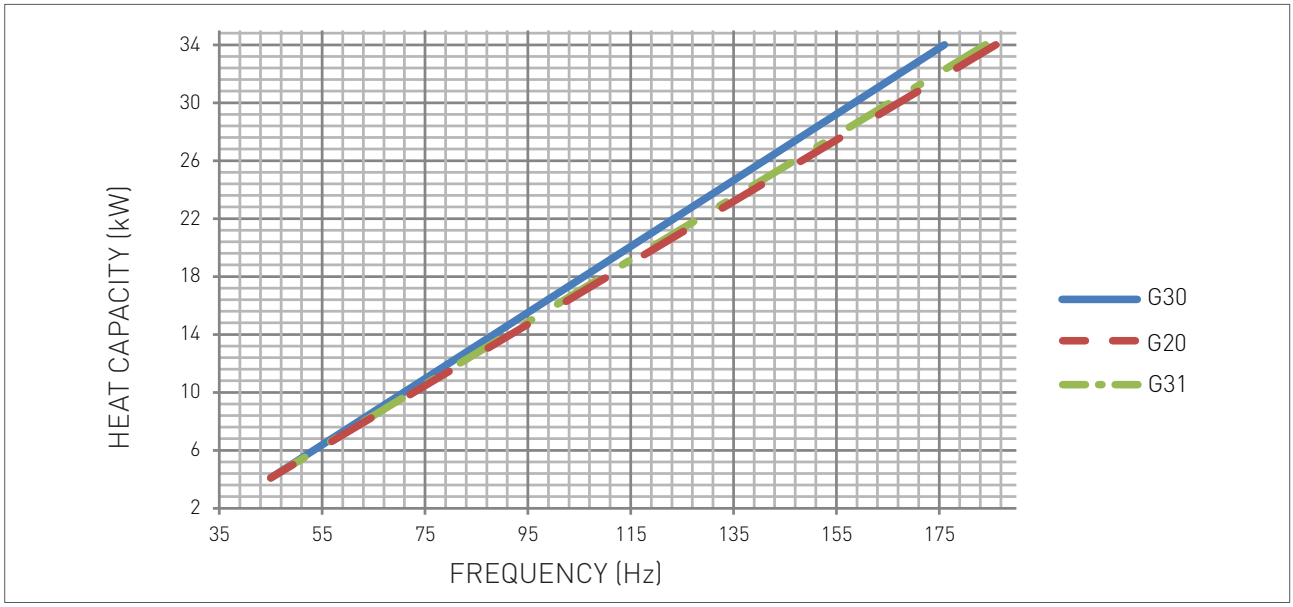

GAS TYPE		MINIMUM HEATING FREQUENCY	MAXIMUM HEATING FREQUENCY
G20	Hz	45	186
G30	Hz	45	176
G31	Hz	45	184

SUPPORT CENTRE

2Diagrammaportatatermica-frequenzaelettr_R1K34_EN

2.2. MAINTENANCE

2.2.7. GENERAL MAINTENANCE WARNINGS

DANGER

Before each components cleaning or replacement operation, ALWAYS cut off the POWER, WATER and GAS supply of the boiler.

WARNING

To ensure greater life span and proper operation of the device, during the maintenance operations use only original spare parts.

ATTENTION

To ensure the efficiency and safety of the device, the maintenance operations must be realized on an annual basis. The operations described below, are essential to the validity of the standard RADIANT warranty and must be performed by professionally qualified personnel in accordance with current legislation and authorized by RADIANT.

Please perform the following operations once a year:

- Check that the system's water PH is between 6.5 and 8.5;
- check the sealing of the gas components, and replace if necessary the gaskets;
- check the sealing of the water components, and replace if necessary the gaskets;
- visually check the flame and the condition of the combustion chamber;
- if necessary make sure that the combustion is suitably adjusted and if required proceed as indicated in section "CO2 VALUE CHECK AND CALIBRATION";
- remove and clean the burner from oxidation;
- check the integrity and the position of the sealed chamber sealing gasket;
- check the primary exchanger, if necessary, clean it;
- check the operation of the gas light up and safety systems. If necessary, remove and clean the flame detection and light up electrodes from incrustations paying attention to respect the distances with respect to the burner;
- check the heating circuit safety systems: limit temperature safety thermostat; limit pressure safety;
- check the pre-load pressure of the expansion vessel;
- make sure that the permanent ventilation outlets are present, correctly sized and functioning, based on the installed devices. Respect the requirements provided by Local and National legislation;
- periodically check the integrity of the fume exhaustion system for safety and proper operation;
- check that the wiring is performed in compliance with the requirements in the boiler instruction manual;
- check the wiring inside the control panel;
- check the proper operation of the condensate draining system, including the devices outside the boiler such as condensate collection devices installed along the path of the fume exhaust duct or neutralization devices for acid condensate.
- check that the liquid flow is not obstructed and that there are no combustion gas refluxes inside the internal system.

2.2.8. TECHNICAL DATA

Model		R1K 34
CE certification	no.	0476CQ0134
Gas category		II2H3B/P
Discharge type	type	B23p-B33-C13-C33-C43-C53-C63-C83-C93
Energy efficiency 92/42 CEE	no. stars	4
Energy efficiency EN13203-1	no. stars	-
Maximum nominal heat capacity in heating circuit	kW	34
Minimum nominal heat capacity in heating circuit	kW	4.1
Useful thermal power - 60/80°C	kW	33.35
Minimum useful thermal power - 60/80°C	kW	3.94
Useful thermal power - 30/50°C	kW	36.19
Performance at 100% Pn - 60/80°C	%	98.08
Performance at 30% Pn - return 47°C	%	102.14
Performance at 30% Pn - return 30°C	%	108.57
Performance at 100% Pn - 30/50°C	%	106.43
Maximum combustion Performance	%	97.6
Fumes temperature at nominal heat capacity	°C	69.4
Fumes temperature at minimum heat capacity	°C	61.3
CO2 at nominal heat capacity - G20	%	9,45 - 9,25
CO2 at minimum heat capacity - G20	%	9,05 - 8,85
CO2 at nominal heat capacity - G30	%	11,4 - 11,2
CO2 at minimum heat capacity - G30	%	10,75 - 10,55
CO2 at nominal heat capacity - G31	%	10,55 - 10,35
CO2 at minimum heat capacity - G31	%	9,90 - 9,70
CO at nominal heat capacity	ppm	75
Fumes mass at nominal heat capacity	g/s	14.96
Fumes mass at minimum heat capacity	g/s	1.88
NOx class	class	6
Weighted Nox (0% O2) mg/kWh	mg/kWh	55
Heating circuit		
Adjustable heating temperature	°C	30-80 / 25-45
Maximum operating temperature for heating circuit	°C	80
Maximum operating pressure for heating circuit	bar	3
Minimum operating pressure for heating circuit	bar	0.3
Capacity of the system expansion vessel	litres	8
Dimensional characteristics		
Width	mm	410
Depth	mm	330
Height	mm	642
Gross weight	Kg	44
Water connections		
Flow	Ø	3/4"
Cold water	Ø	1/2"
Gas	Ø	3/4"

Return	Ø	3/4"
Fume exhaust fittings		
Maximum electric fan pressure available	Pa	91
Minimum electric fan pressure available	Pa	5.8
Max discharge length Ø60/100 - Hor Co-ax	m	2
Max discharge length Ø80/125 - Hor Co-ax	m	10
Max discharge length Ø50/50 - Hor Split	m	3
Max discharge length Ø60/60 - Hor Split	m	14
Max discharge length Ø80/80 - Hor Split	m	60
Max discharge length Ø50 - Hor duct	m	2
Max discharge length Ø60 - Hor duct	m	12
Max discharge length Ø80 - Hor duct	m	35
Max discharge length Ø60/100 - Vert Co-ax	m	2
Max discharge length Ø80/125 - Vert Co-ax	m	10
Max discharge length Ø50/50 - Vert Split	m	3
Max discharge length Ø60/60 - Vert Split	m	14
Max discharge length Ø80/80 - Vert Split	m	60
Max discharge length Ø50 - Vert duct	m	2
Max discharge length Ø60 - Vert duct	m	12
Max discharge length Ø80 - Vert duct	m	35
Electrical specifications		
Voltage-frequency	V/Hz	220-230/50
Max Absorbed Power	W	78
Insulation rate	IP	X5D
Gas supply		
Nominal supply pressure - G20	mbar	20
Heating Max. fan speed - G20	Hz	186
Heating Min. fan speed - G20	Hz	45
Fuel consumption - G20	m^3/h	3.60
Nominal Supply pressure - G30	mbar	28-30
Heating Max. fan speed - G30	Hz	176
Heating Min. fan speed - G30	Hz	45
Fuel consumption - G30	kg/h	2.68
Nominal Supply pressure - G31	mbar	37
Heating Max. fan speed - G31	Hz	184
Heating Min. fan speed - G31	Hz	45
Fuel consumption - G31	kg/h	2.64

Technical parameters for boiler space heaters, boiler combination heaters and cogeneration space heaters

Model		R1K 34
Condensing boiler	[yes/no]	yes
Low-temperature (**) boiler:	[yes/no]	no
B11 boiler	[yes/no]	no
Cogeneration space heater	[yes/no]	no
If yes, equipped with a supplementary heater	[yes/no]	no
Combination heater	[yes/no]	no
Rated heat output Prated	kW	33.35
For boiler space heaters and boiler combination heaters: Useful heat output		
At rated heat output and high-temperature regime (*) P_4	kW	33.35
At 30 % of rated heat output and low-temperature regime (**) P_1	kW	10.20
For cogeneration space heaters: Useful heat output		
At rated heat output of cogeneration space heater with supplementary heater disabled $P_{CHP100+Sup0}$	kW	-
At rated heat output of cogeneration space heater with supplementary heater enabled $P_{CHP100+Sup100}$	kW	-
For cogeneration space heaters: Electrical efficiency		
At rated heat output of cogeneration space heater with supplementary heater disabled $\eta_{el,CHP100+Sup0}$	%	-
At rated heat output of cogeneration space heater with supplementary heater enabled $\eta_{el,CHP100+Sup100}$	%	-
Auxiliary electricity consumption		
At full load elmax	kW	0.04
At part load elmin	kW	0.02
In standby mode PSB	kW	0.004
Seasonal space heating energy efficiency η_s	%	93
Seasonal space heating energy efficiency class		A
For boiler space heaters and boiler combination heaters: Useful efficiency		
At rated heat output and high-temperature regime (*) η_4	%	88.3
At 30 % of rated heat output and low-temperature regime (**) η_1	%	97.8
For cogeneration space heaters: Useful efficiency		
At rated heat output of cogeneration space heater with supplementary heater disabled $\eta_{CHP100+Sup0}$	%	-
At rated heat output of cogeneration space heater with supplementary heater enabled $\eta_{CHP100+Sup100}$	%	-
Supplementary heater		
Rated heat output Psup	kW	-
Type of energy input		-
Other items		
Standby heat loss P_{stby}	kW	0.1
Ignition burner power consumption P_{ign}	kW	0.0

Annual energy consumption Q_{HE}	kWh / GJ	29444 / 106
Sound power level, indoors L_{WA}	dB	52
For combination heaters:		
D.H.W. energy efficiency class		-
Declared load profile		-
Daily electricity consumption Q_{elec}	kWh	-
Annual electricity consumption AEC	kWh	-
Water heating energy efficiency η_{wh}	%	-
Daily fuel consumption Q_{fuel}	kWh	-
Annual fuel consumption AFC	GJ	-
Contact details	Tel. +39 0721 9079.1 - fax. +39 0721 9079299 - e-mail: info@radiant.it - http://www.radiant.it	
Name and address of the supplier	RADIANT BRUCIATORI S.p.A. Via Pantanelli, 164/166 - 61025 - Montelabbate (PU)	

(*) High-temperature regime means 60 °C return temperature at heater inlet and 80 °C feed temperature at heater outlet.

(**) Low temperature means for condensing boilers 30 °C, for low-temperature boilers 37 °C and for other heaters 50 °C return temperature (at heater inlet).

2.2.9. TECHNICAL ASSEMBLY

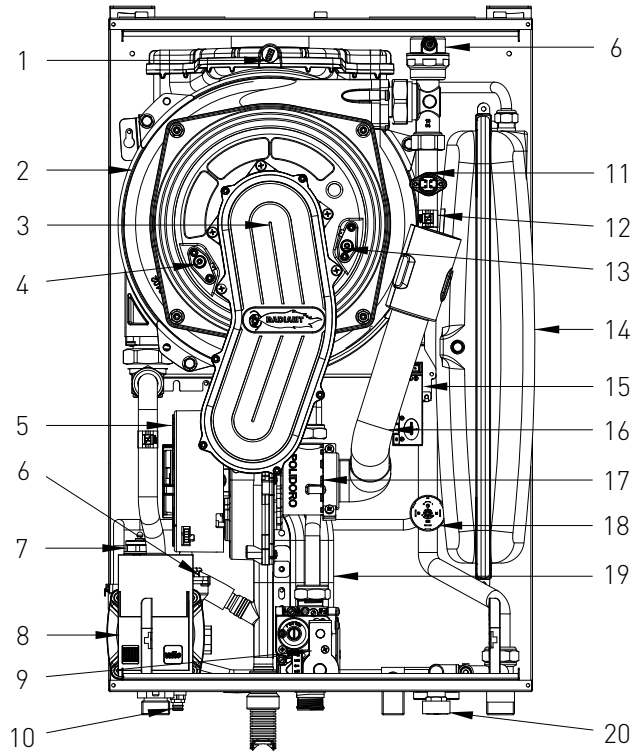

KEY

1. FUMES SAFETY THERMOFUSE
2. HEAT EXCHANGER
3. BURNER UNIT
4. DETECTION ELECTRODE
5. ELECTRIC FAN
6. AIR RELIEF VALVE
7. SAFETY VALVE 3 bar
8. MODULATING PUMP
9. GAS VALVE
10. SYSTEM DRAINING TAP
11. SAFETY THERMOSTAT
12. HEATING PROBE
13. LIGHT UP ELECTRODE
14. EXPANSION TANK
15. START-UP TRANSFORMER
16. AIR SUCTION TUBE
17. PROPORTIONAL VENTURI
18. WATER PRESSURE SWITCH
19. CONDENSATE COLLECTION SIPHON
20. SYSTEM FILLING TAP

2.2.10. HYDRAULIC BOARD

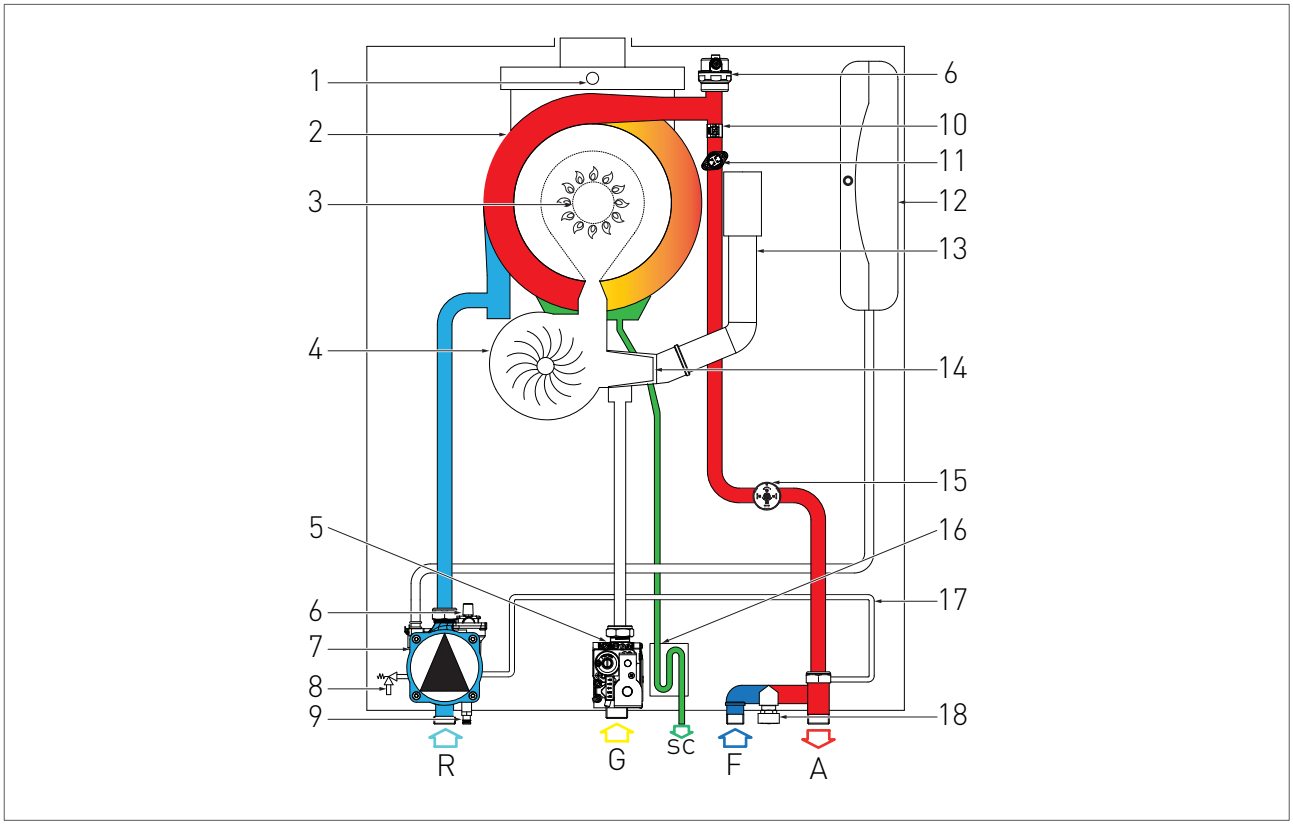

KEY

R. HEATING RETURN
G. GAS INLET
SC. CONDENSATE DRAIN
F. COLD WATER INLET
A. HEATING FORWARD

1. FUMES SAFETY THERMOFUSE
2. HEAT EXCHANGER
3. BURNER UNIT
4. ELECTRIC FAN
5. GAS VALVE
6. AIR RELIEF VALVE
7. CIRCULATOR
8. SAFETY VALVE 3 bar
9. SYSTEM DRAINING TAP
10. HEATING PROBE
11. SAFETY THERMOSTAT
12. EXPANSION TANK
13. AIR SUCTION TUBE
14. PROPORTIONAL VENTURI
15. WATER PRESSURE SWITCH
16. CONDENSATE COLLECTION SIPHON
17. BY-PASS
18. SYSTEM FILLING TAP

2.2.11. WIRING DIAGRAM

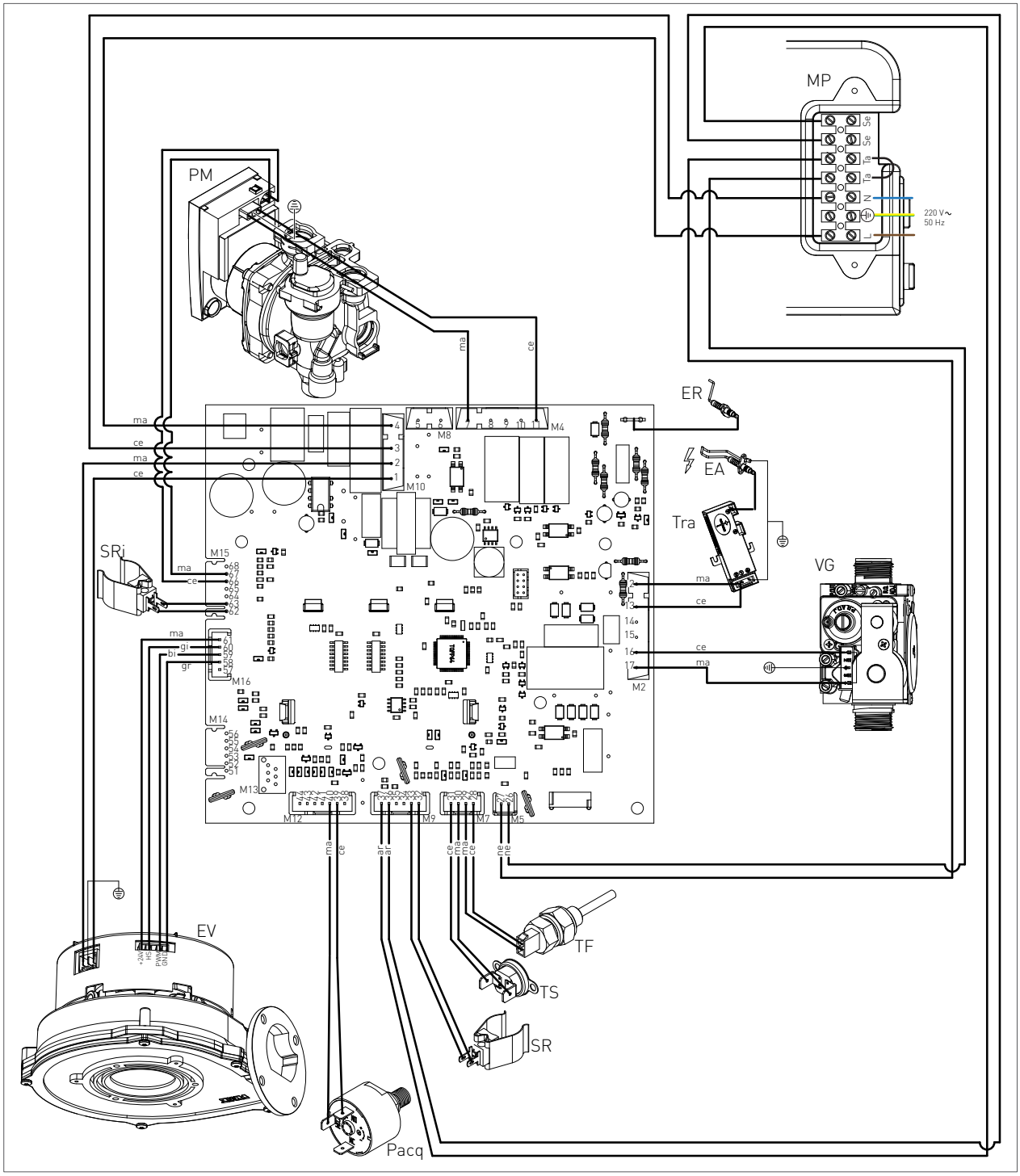

ER: DETECTION ELECTRODE	TS: SAFETY THERMOSTAT	MP: PANEL TERMINAL	CE: BLUE
EA: START-UP ELECTRODE	PACQ:WATER PRESSURE SWITCH	SE: EXTERNAL PROBE	MA: BROWN
PM: MODULATING PUMP	TF: FUMES THERMOFUSE (102°C)	TA: ENVIRONMENT THERMOSTAT	AR: ORANGE
VG: GAS VALVE	SR: HEATING PROBE	L: LINE	GI: YELLOW
TRA:START-UP TRANSFORMER	EV: ELECTRIC FAN	N: NEUTRAL	BI: WHITE
	SRI: RETURN SENSOR	NE: BLACK	GR. GREY

2.2.12. ACCESSING THE BOILER

For the majority of the control and maintenance operations you have to remove one or more panels of the casing.

The side panels can be removed only after removing the front panel.

To intervene on the front of the boiler proceed as follows:

› remove the fastening screws (1 - fig.1) placed on the lower edge of the front panel;

› grab the front panel from the bottom and remove it pulling it to yourself and then upwards (see fig. 1).

To intervene on the side panels of the boiler proceed as follows:

› remove the fastening screws (2 - fig.1) placed on the front edge of the side panel;

› grab the bottom of the panel and remove it by moving it sideways and then pulling it upwards (see fig. 1).

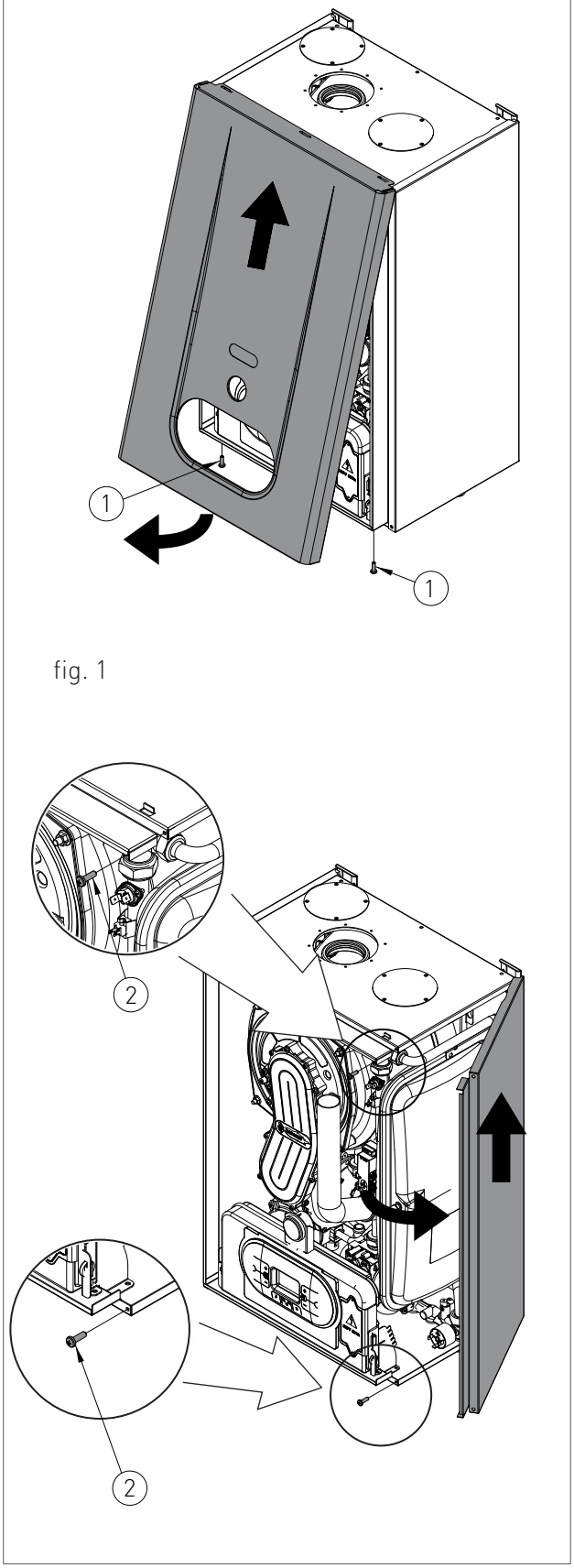

fig. 1

2.2.13. ACCESSING THE ELECTRONIC BOARD

In order ot intervene on the wirings of the control panel, please proceed as follows:

DANGER
Cut off the voltage from the main switch.

- Grab at the same time the support brackets of the control panel (fig. 1) loosening them and turn the panel downwards;
- unscrew the four fastening screws 1 - fig. 1;
- remove the crankcase pulling it upwards.

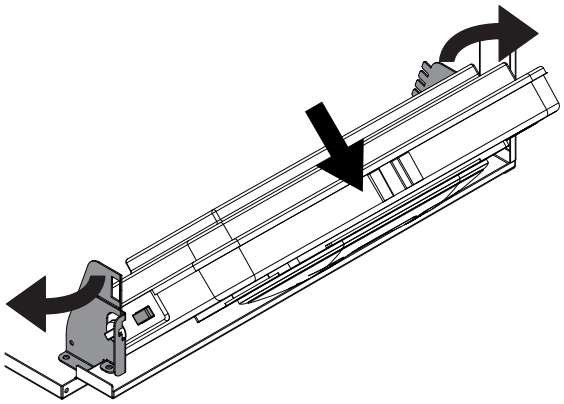

fig. 1

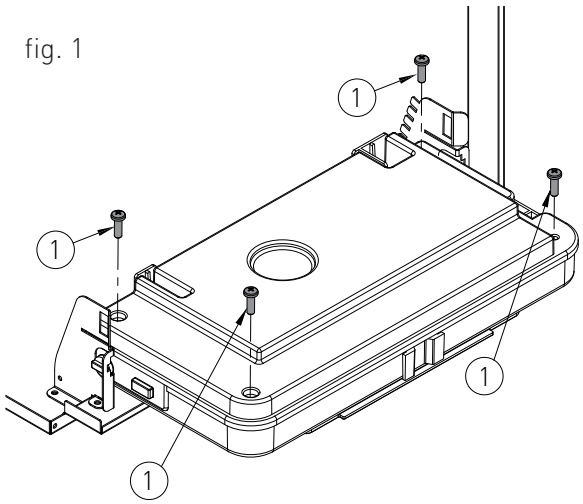

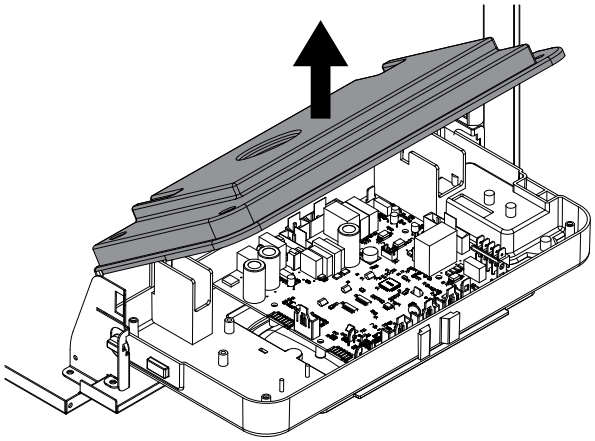

2.2.14. SYSTEM EMPTYING

HEATING SYSTEM EMPTYING

Whenever you need to empty the system, proceed as follows:

- switch the boiler to "WINTER" mode and activate it;
- turn off the main power supply switch;
- wait for the boiler to cool down;
- connect a flexible tube to the system emptying outlet and connect the other end of the tube to a suitable discharge;
- turn the discharge tap of the system 'RS' (fig. 1);
- open the relief valves of the radiators starting from the one at the top and continuing downwards;
- after draining out all water, close the relief valves of the radiators and the emptying tap.

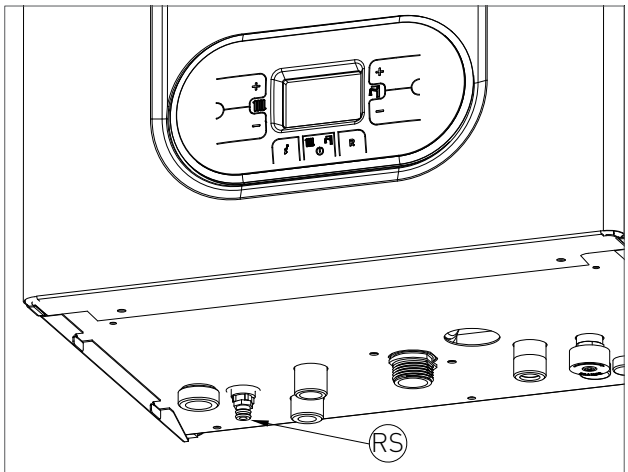

fig. 1

2.2.15. FAULT SIGNALLING CODES

To view the last 5 fault signalling codes chronologically, starting with the most recent one, activate the 'OFF' mode by pressing the FUNCTION '' key and hold the key INFO '' for 5 seconds. Use keys '' and '' of the heating circuit to scroll through the list of saved faults. To reset the fault history press the RESET '' key. To exit display mode press the INFO '' key.

CODE	FAULT	POSSIBLE CAUSE	SOLUTION	RESET
E01	***FLAME BLOCK***	**NO FLAME LIGHT UP**		MANUAL RESET (PRESS THE RESET '' KEY).
		GAS MISSING;	CHECK THE ADDUCTION NETWORK;	
		MASS OR BROKEN START-UP ELECTRODE;	REPLACE IT;	
		GAS VALVE BROKEN;	REPLACE IT;	
		SLOW LIGHT UP TOO LOW ADJUSTMENT;	ADJUST MINIMUM OR SLOW LIGHT UP;	
		VALVE INFEED PRESSURE TOO HIGH (ONLY FOR GPL BOILERS).	CHECK THE MAXIMUM ADJUSTMENT PRESSURE	
		WITH FLAME LIGHT UP		
		NEUTRAL AND PHASE INVERTED POWER SUPPLY;	PROPERLY CONNECT THE POWER SUPPLY;	
		DETECTION ELECTRODE BROKEN;	REPLACE IT;	
		DETECTION ELECTRODE CABLE DISCONNECTED.	CHECK THE WIRING.	
		ELECTRICAL CURRENT PHASE-PHASE	IF THE TENSION MEASURES BETWEEN NEUTRAL AND GROUND IS ALMOST EQUAL TO THE ONE MEASURED BETWEEN PHASE AND GROUND, YOU HAVE TO INSTALL A PHASE-PHASE TRANSFORMER KIT (COD. 88021LA)	

CODE	FAULT	POSSIBLE CAUSE	SOLUTION	RESET
E02	***SAFETY THERMOSTAT (95°C)***	THERMOSTAT CABLE DISCONNECTED;	CHECK THE WIRING:	MANUAL RESET (PRESS THE RESET "R" KEY).
		BROKEN THERMOSTAT.	REPLACE IT.	
E03	***FUMES SAFETY THERMOFUSE (102°C)***	THERMOFUSE BROKEN;	REPLACE IT;	MANUAL RESET (PRESS THE RESET "R" KEY).
		THERMOFUSE CABLE DISCONNECTED.	CHECK THE WIRING.	
E04	***WATER MISSING IN THE SYSTEM***	INSUFFICIENT WATER PRESSURE INSIDE THE SYSTEM (LOWER THAN 0.3 BAR);	LOAD THE SYSTEM;	AUTOMATIC.
		WATER PRESSURE SWITCH CABLE DISCONNECTED;	CHECK THE WIRING;	
		WATER PRESSURE SWITCH BROKEN.	REPLACE IT.	
E05	***HEATING PROBE***	BROKEN OR INCORRECTLY CALIBRATED PROBE (RESISTANCE VALUE 10 KOHM AT 25 °C NTC);	REPLACE IT;	AUTOMATIC.
		DISCONNECTED OR WET PROBE CONNECTOR.	CHECK THE WIRING.	
E15	***RETURN PROBE***	BROKEN OR INCORRECTLY CALIBRATED PROBE (RESISTANCE VALUE 10 KOHM AT 25 °C NTC);	REPLACE IT;	AUTOMATIC.
		DISCONNECTED OR WET PROBE CONNECTOR.	CHECK THE WIRING.	
E16	***ELECTRIC FAN***	ELECTRIC FAN BOARD BROKEN;	REPLACE IT;	AUTOMATIC.
		ELECTRIC FAN BROKEN;	REPLACE IT;	
		FAULTY POWER SUPPLY CABLE.	REPLACE IT.	

CODE	FAULT	POSSIBLE CAUSE	SOLUTION	RESET
E18	***INSUFFICIENT CIRCULATION***	EXCHANGER OBSTRUCTED;	CLEAN OR REPLACE THE EXCHANGER;	AUTOMATIC.
		CIRCULATOR BROKEN OR DIRTY IMPELLER.	CLEAN THE IMPELLER OR REPLACE THE CIRCULATOR.	
E21	***GENERAL INTERNAL BOARD ERROR***	INCORRECT SIGNAL RECOGNITION BY THE MODULATION BOARD MICRO-PROCESSOR.	IF THE MODULATION BOARD DOES NOT RESET THE ERROR AUTOMATICALLY, REPLACE IT.	AUTOMATIC.
E22	***PARAMETERS PROGRAMMING REQUEST***	MICRO=PROCESSOR MEMORY LOSS.	PARAMETERS REPROGRAMMING.	MANUAL RESET (CUT OFF THE TENSION).
E35	***RESIDUAL FLAME***	FAULTY DETECTION ELECTRODE;	CLEAN IT OR REPLACE IT;	MANUAL RESET (PRESS THE RESET "R" KEY).
		FAULTY DETECTION ELECTRODE CABLE;	REPLACE IT;	
		FAULTY MODULATION BOARD.	REPLACE IT.	
E40	***SUPPLY VOLTAGE***	SUPPLY VOLTAGE OFF THE OPERATION RANGE (≤160 VOLTS).	CHECK THE POWER SUPPLY NETWORK (THE ERROR DEACTIVATES AUTOMATICALLY AS SOON AS THE SUPPLY VOLTAGE FALLS BACK WITHIN THE REQUESTED LIMITS).	AUTOMATIC.

2.2.16. ACTIVE FUNCTIONS SIGNALLING CODES

CODE	FUNCTION	DESCRIPTION
F07	***CHIMNEY SWEEP ACTIVE***	YOU CAN ACTIVATE IT BY HOLDING FOR 7 SECONDS THE RESET '®' KEY AND YOU CAN DEACTIVATE IT BY TURNING OFF THE BOILER. THIS FUNCTION BRINGS THE BOILER TO ITS MINIMUM AND MAXIMUM HEATING POWER FOR 15 MINUTES DEACTIVATING THE MODULATION FUNCTION. GENERALLY USED FOR PERFORMING THE COMBUSTION AND CALIBRATION TESTS.
F08	***HEATING CIRCUIT ANTI-FREEZE***	IT ACTIVATES AUTOMATICALLY WHEN THE HEATING PROBE DETECTS A TEMPERATURE OF 12°C. THE BOILER OPERATES AT MINIMUM GAS PRESSURE WITH THE DIVERTER VALVE SET TO 'WINTER' MODE. IT DEACTIVATES WHEN THE HEATING FLOW WATER TEMPERATURE REACHES THE 30°C AND, IN PRESENCE OF A RETURN SENSOR, WHEN THE HEATING RETURN WATER TEMPERATURE REACHES THE 20°C.
F33	***SYSTEM AIR RELEASE CYCLE***	IT ACTIVATES AUTOMATICALLY AT FIRST BOILER START-UP, PERFORMING FOR 5 MINUTES A SERIES OF CYCLES DURING WHICH THE PUMP IS ACTIVATED FOR 40 SECONDS AND DEACTIVATED FOR 20 SECONDS. REGULAR OPERATION IS ALLOWED ONLY AFTER THIS FUNCTION IS COMPLETED. IT CAN ALSO ACTIVATE DURING NORMAL BOILER OPERATION, IF THE WATER PRESSURE SWITCH CONFIRMATION IS MISSING, WHEN THE CONTACT IS RE-CLOSED, A 2 MINUTES RELEASE CYCLE WILL BE PERFORMED.

Zodiac integrazione funzionalità_solo tec_MAH4_fmL18TE_EN

2.2.17. GAS TYPE TRANSFORMATION

ATTENTION

Make sure that the gas adduction tube is suitable for the new type of fuel with which the boiler is supplied.

- loosen the two screws '1' (fig.1) from the fastening bush, and remove the air suction tube;
- unscrew the tube coupling that connects the gas valve to venturi;
- unscrew the three fastening screws '2' (fig.1) of the venturi 'V' (fig.1) using a 10 key, as shown in figure 2;
- remove the two screws '3' (fig.3) and apply pressure on the rear side of venturi 'C' (fig.3);
- replace the body venturi with the one suitable for the type of supply gas (cod. 30-00207 for methane / cod. 30-00201 for GPL) and make sure the tooth 'D' (fig.3) is adjusted downwards on the aluminium ring nut (see fig.3);
- remount the components following the demounting operations in reverse making sure that gasket 'G' is re-assembled as shown in fig.1;
- set the boiler to operate with the new type of gas, changing the value of the parameter P02 'GAS TYPE SELECTION' from the control panel (see chapters 'DIGITECH CS PARAMETERS TABLE' and 'ACCESSING AND PROGRAMMING THE PARAMETERS');
- adjust the CO_2 combustion value as indicated in chapter 'CO2 VALUE CHECK AND CALIBRATION'.

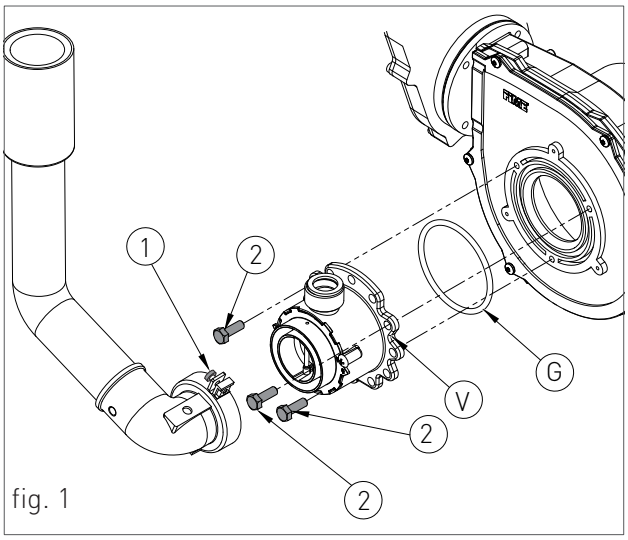

fig. 1

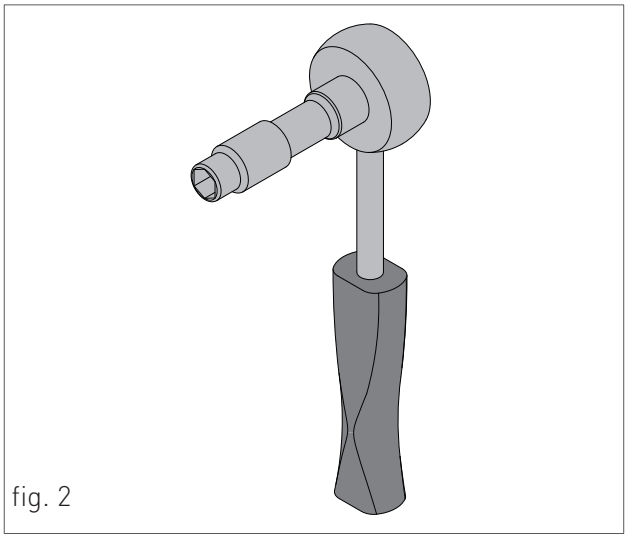
fig. 2

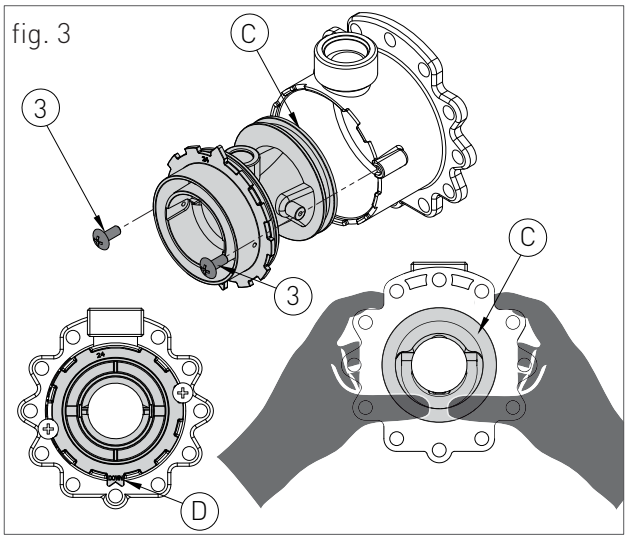

fig. 3

3. USER SECTION

The operations described in this section are addressed to all those who will use the machine. The machine must be used and accessed only by qualified operators that fully read and understood the User section, paying particular attention to the warnings.

3.1. USE

3.1.1. GENERAL USE WARNINGS

WARNING
Before starting the boiler the User must make sure that the First start-up certificate has the stamp of the technical Support Centre proving the testing and the first start-up of the boiler.

WARNING
To validate the warranty, the boiler must be started by a technical Support Centre authorized by RADIANT no later than 30 days from the date of installation.

WARNING
In order to take advantage of the guarantee provided by the manufacturer, the customer should carefully and exclusively observe the instructions given in the USER section of the manual.

ATTENTION
This machine may be used only for the purpose for which it has been designed: heat water to a temperature below boiling point at atmospheric pressure. Any other use is considered wrong and dangerous. The manufacturer is excluded from any contractual or out of contract responsibility for damage caused to people, animals or property due to incorrect use.

DANGER
The boiler should not be used by persons (including children) with reduced physical, sensory or mental capacities or without suitable knowledge or experience unless they are instructed on the device use or monitored by a person responsible for their safety.

DANGER
DO NOT obstruct the air vents of the location in which the gas device is installed to prevent the formation of toxic explosive mixes.

DANGER
If you sense a gas odour in the location in which the boiler is installed, proceed as follows:

- DO NOT use electrical switches, the telephone or any other device that might generate electrical discharges or sparks;
- Immediately open all doors and windows to create an air exchange that can quickly clean the location;
- Close the gas valves;
- Request immediate intervention of qualified staff.

DANGER
The use of the electrical power boiler implies respecting some fundamental rules such as:

- DO NOT touch the device with wet and/or humid parts and/or with bare feet;
- DO NOT pull the electrical cables;
- DO NOT leave the device exposed to atmospheric agents (rain, sun, etc.) unless specifically intended;
- in case of cable damage, turn off the device and contact qualified professional staff to replace it.

3.1.2. CONTROL PANEL

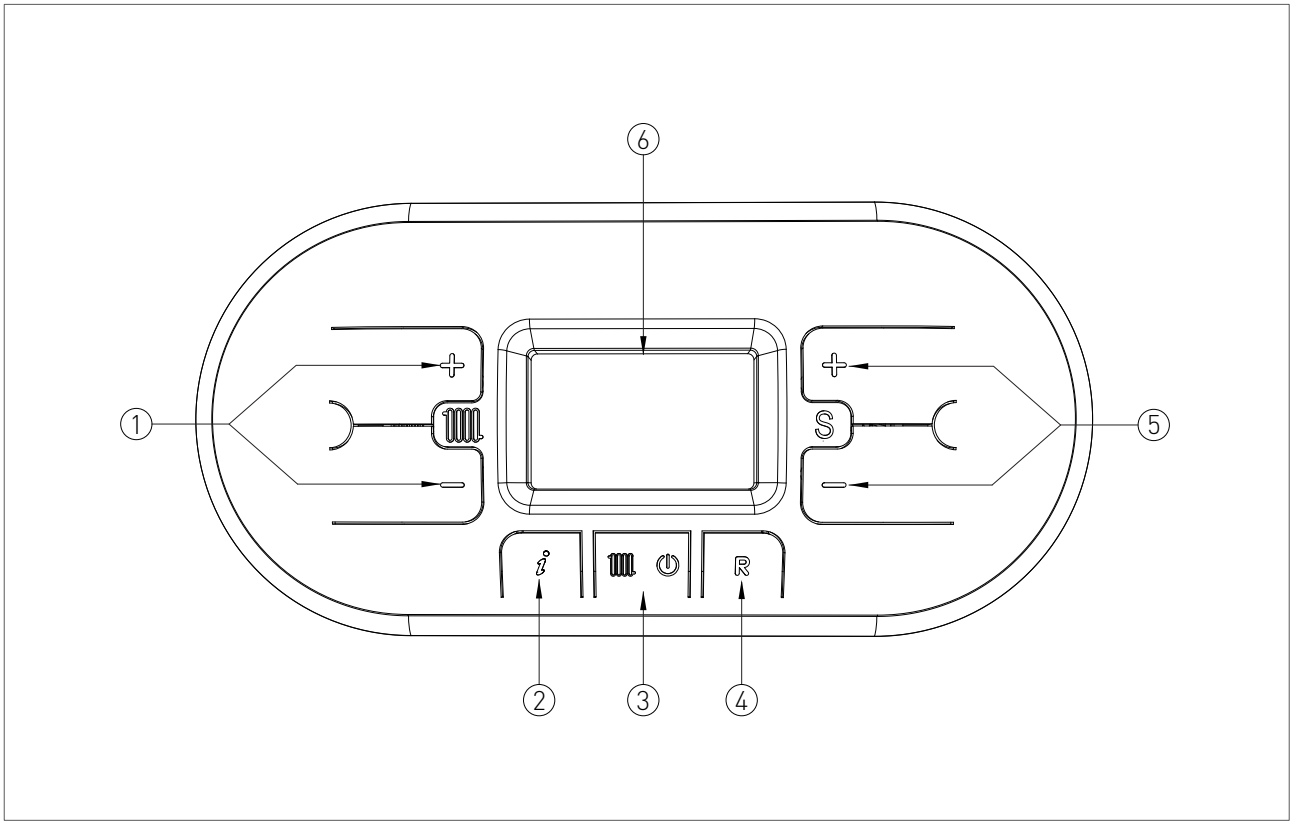

KEY

1. HEATING TEMPERATURE ADJUSTMENT KEYS.

2. INFO KEY: PRESS ONCE TO VIEW THE TEMPERATURES AND OTHER INFORMATION (see chapter 'INFO MENU DISPLAY) - HOLD FOR 5 SECONDS, IN OFF OPERATING MODE, TO VIEW THE LAST 5 FAULTS.

3. OPERATING MODE SELECTION KEY: ONLY HEATING / OFF.

4. RESET KEY: FAULTS RESET - CHIMNEY SWEEP FUNCTION ACTIVATION (HOLD FOR 7 SECONDS).

5. VALUE OF THE PARAMETERS ADJUSTMENT KEY / HOLD THE KEYS AT THE SAME TIME FOR 5 SECONDS TO ACTIVATE DISPLAY BACK LIGHT FOR 10 MINUTES.

6. DISPLAY

USER

3.1.3. DISPLAY ICONS

KEY

1. INDICATION OF PARAMETER NUMBER OR DISPLAYED INFO CODE
2. PARAMETERS PROGRAMMING FUNCTION ACTIVE
3. SIGNALLING CONNECTED SOLAR BOARD / SOLAR COLLECTOR TEMPERATURE DISPLAY (d5)
4. SOLAR PUMP ACTIVE
5. BOILER LOWER TEMPERATURE DISPLAY (d6) / BOILER UPPER TEMPERATURE DISPLAY (d7)
6. EXTERNAL PROBE INSTALLED / EXTERNAL PROBE TEMPERATURE (d1)
7. TEMPERATURE DISPLAY / SET POINT / PARAMETER VALUE
8. OPEN THERM COMMUNICATION PRESENT (REMOTE CONTROL / AREA CONTROL UNIT)
9. INSUFFICIENT SYSTEM WATER PRESSURE SIGNALLING
10. FLAME PRESENT SIGNALLING / IT ALSO INDICATES, ON 3 PERCENTAGE LEVELS, THE MODULATING POWER LEVEL OF THE BOILER (fig.2)
11. ERROR DISPLAY THAT CAN BE RESET
12. OFF OPERATING MODE
13. ERROR DISPLAY THAT CAN NOT BE RESET
14. OPERATION IN HEATING MODE ENABLED

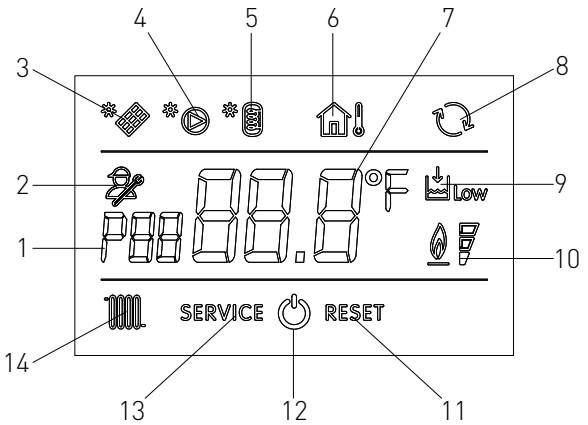

fig. 1

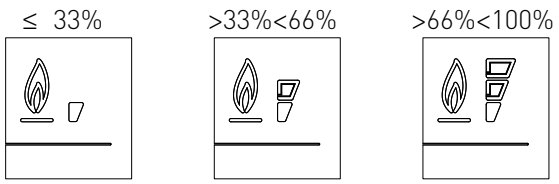

fig. 2

USER

3 Icone del display_solo risc_MIAH4_EN

3.1.4. INFO MENU DISPLAY DATA

To view the boiler data from info menu you just have to press the INFO '(i)' key. The info code will be displayed on the left side of the screen and its relative value will be displayed on the centre of the screen. Use keys '⊕' and '⊖' of the heating circuit to scroll through the list of displayed data. To exit display mode press the INFO '(i)' key.

LIST OF DISPLAYED DATA

INFO CODE	ICON	DESCRIPTION
d0		DOMESTIC CIRCUIT PROBE TEMPERATURE
d1		EXTERNAL PROBE TEMPERATURE
d2		FAN SPEED
d3		BOTTOM AREA PROBE TEMPERATURE [IF AREA BOARD INSTALLED]
d4		RETURN PROBE TEMPERATURE
d5		SOLAR COLLECTOR TEMPERATURE [IF SOLAR BOARD INSTALLED] (SCS)
d6		SOLAR BOILER TEMPERATURE (BOTTOM) [IF SOLAR BOARD INSTALLED] (SBSI)
d7		SOLAR BOILER TEMPERATURE (TOP) [IF SOLAR BOARD INSTALLED] (SBSS)
d8		SOLAR COLLECTOR PROBE TEMPERATURE 2 [IF SOLAR BOARD INSTALLED] (SCS2)
d9		EXTRA SOLAR BOILER TEMPERATURE [IF SOLAR BOARD INSTALLED] (SBS3)

USER

3.1.5. START-UP

Before starting the boiler make sure that it is powered and that the gas tap below the boiler is open.

To start the boiler press the function key ' ' and select the desired operating mode. If the symbol is displayed fixed, it means that the function was activated.

3.1.6. OPERATING MODE

ONLY HEATING MODE

In this mode the boiler meets only the demands of heating.

To switch the boiler to ONLY HEATING operating mode, press the function key ' ', the symbol ' ' will appear fixed on the display, indicating that the function is enabled.

Whenever heating energy is needed to heat the rooms the automatic start-up system will start the burner; this is indicated by displaying the symbol ' ' blinking.

ADJUSTING THE HEATING TEMPERATURE

You can adjust the temperature using keys ' ' and ' ' of the heating circuit :

- press key ' ' to decrease the temperature.
- press key ' ' to increase the temperature.

The heating temperature adjustment field ranges from 30 °C to 80 °C (25 °C – 45 °C for floor systems).

OFF MODE

In this mode the boiler no longer meets the heating demands, the anti-freeze and pump anti-locking systems still remain active.

To switch the boiler to OFF operating mode, press the function key ' ', the symbol ' ' will appear fixed on the display, indicating that the function is enabled (for non condensing models will appear the message 'OFF').

If the boiler was previously running, it will be turned off and the post-ventilation and post-circulation functions will be enabled.

If you have to deactivate the boiler for a long period of time, proceed as follows:

› contact the Technical support centre that will empty the water system, where no anti-freeze is intended, and will cut off the power, water and gas supply.

› Or leave the boiler in OFF operating mode keeping active the electrical and gas supplies so that the anti-freeze function may activate.

USER

3.1.7. INFORMATIONAL NOTE ON ANTI-FREEZE FUNCTION

The boiler is protected against freezing thanks to the electronic board preparation with functions that start the burner and heat the concerned parts when their temperature goes below the minimum pre-set values.

WARNING
This function is available only if:

- the boiler is powered;
- the gas supply is open;
- the pressure of the system is proper;
- the boiler is not blocked.

Versione_Modelli_Finanziamento_Articolo_codice_MAH4_MAH6_EN

3.1.8. SYSTEM FILLING

To restore the water pressure inside the system open the loading tap "R" (fig. 1) and make sure using pressure gauge "M" (fig. 1), that the system pressure reaches 1.2 bar (see fig. 2).

After performing this operation, make sure that the loading tap "R" (fig. 1) is properly closed.

After the water pressure reset the boiler will automatically perform a 2 minutes system relief cycle. Throughout this function the display will show the code "F33". The boiler can work normally only after completing the operation.

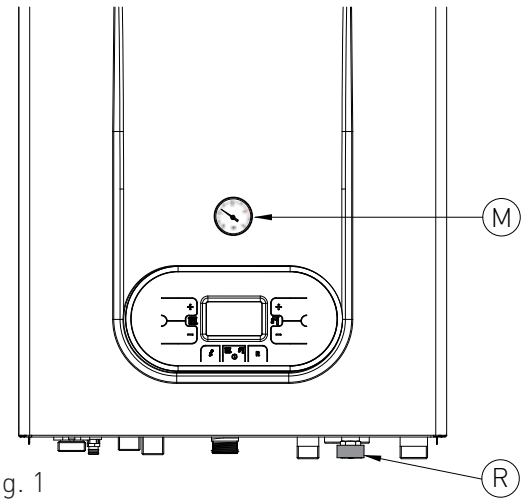

fig. 1

fig. 2

3.1.9. FAULT SIGNALLING CODES

The boiler might signal some faults by displaying a code. Below you have a list of the codes and of the operations to be performed in order to unlock the boiler.

CODE	ICON	FAULT	INTERVENTION
E01	RESET	***FLAME BLOCK***	MAKE SURE THAT THE BOILER AND CONTACTOR GAS VALVES ARE OPEN.
			PRESS THE RESET "R" BUTTON ON THE CONTROL PANEL TO RESET THE FAULT, AS SOON AS THE ERROR CODE DISAPPEARS FROM THE DISPLAY, THE BOILER WILL START AUTOMATICALLY.
			IF THE BLOCK PERSISTS CONTACT THE TECHNICAL SUPPORT CENTRE.
E02	RESET	***SAFETY THERMOSTAT (95 °C)***	PRESS THE RESET "R" BUTTON ON THE CONTROL PANEL TO RESET THE FAULT, AS SOON AS THE ERROR CODE DISAPPEARS FROM THE DISPLAY, THE BOILER WILL START AUTOMATICALLY.
			IF THE BLOCK PERSISTS CONTACT THE TECHNICAL SUPPORT CENTRE.
E03	RESET	***FUMES SAFETY THERMOFUSE (102 °C)***	CONTACT THE TECHNICAL SUPPORT CENTRE.
E04	Low	***WATER MISSING IN THE SYSTEM***	IF THE SYSTEM PRESSURE IS BELOW 1.2 BAR, FILL THE SYSTEM AS DESCRIBED IN CHAPTER "SYSTEM FILLING".
			IF THE BLOCK PERSISTS CONTACT THE TECHNICAL SUPPORT CENTRE.
E05	SERVICE	***HEATING PROBE***	CONTACT THE TECHNICAL SUPPORT CENTRE.
E15	SERVICE	***RETURN PROBE***	CONTACT THE TECHNICAL SUPPORT CENTRE.
E16	SERVICE	***ELECTRIC FAN***	CONTACT THE TECHNICAL SUPPORT CENTRE.
E18	SERVICE	***INSUFFICIENT CIRCULATION***	CONTACT THE TECHNICAL SUPPORT CENTRE.
E21	SERVICE	***GENERAL INTERNAL BOARD ERROR***	CUT OFF THE POWER SUPPLY FROM THE MAIN SWITCH AND THEN RESTORE IT, AS SOON AS THE ERROR CODE DISAPPEARS, THE BOILER WILL RESTART AUTOMATICALLY.
			IF THE BLOCK PERSISTS CONTACT THE TECHNICAL SUPPORT CENTRE.

CODE	ICON	FAULT	INTERVENTION
E22	**SERVICE**	***PARAMETERS PROGRAMMING REQUEST***	CUT OFF THE POWER SUPPLY FROM THE MAIN SWITCH AND THEN RESTORE IT, AS SOON AS THE ERROR CODE DISAPPEARS, THE BOILER WILL RESTART AUTOMATICALLY. IF THE BLOCK PERSISTS CONTACT THE TECHNICAL SUPPORT CENTRE.
E35	**RESET**	***RESIDUAL FLAME***	PRESS THE RESET "R" BUTTON ON THE CONTROL PANEL TO RESET THE FAULT, AS SOON AS THE ERROR CODE DISAPPEARS FROM THE DISPLAY, THE BOILER WILL START AUTOMATICALLY.
E40	**SERVICE**	***SUPPLY VOLTAGE***	CONTACT THE TECHNICAL SUPPORT CENTRE.

3.1.10. ACTIVE FUNCTIONS SIGNALLING CODES

CODE	FUNCTION	INTERVENTION
F08	***HEATING ANTI-FREEZE FUNCTION ACTIVE***	WAIT UNTIL THE OPERATION IS COMPLETED
F33	***SYSTEM AIR RELEASE CYCLE IN PROGRESS***	WAIT UNTIL THE OPERATION IS COMPLETED

USER

3.1.11. MAINTENANCE

To ensure proper boiler safety and efficiency, please contact RADIANT technical support network to check the device every year.

An accurate maintenance should improve system management.

3.1.12. COVER CLEANING

Clean the cover of the device using a wet cloth and come neutral soap.

WARNING
DO NOT use abrasive or powder detergents as they might damage the plastic cover and control elements.

3.1.13. DISPOSAL

The boiler and all its accessories must be differentiated, suitably disposed of in accordance with the standards in force.

The use of the symbol WEEE (Waste Electrical and Electronic Equipment) shows that this product can not be dismantled as domestic waste. Proper dismantle of this product helps preventing potentially negative consequences on human health and environment.

RADIANT BRUCIATORI s.p.a.

Via Pantanelli, 164/166 - 61025 Loc. Montelabbate (PU)

Tel. +39 0721 9079.1 • fax. +39 0721 9079279

e-mail: info@radiant • Internet: http://www.radiant.it